Ural (Урал) - Dnepr (Днепр) Russian Motorcycle Evolution

Part II: Alternators / Generators

(See Also Studies on Part I: Russian Engines, Part III: Russian Ignition Systems and Part IV: Russian Carburetors)

Ernie Franke
eafranke@tampabay.rr.com

6 / 2013

Generators/Alternators for Ural (Урал) and Dnepr (Днепр)

Generator/ Alternator	Type	Vintage	Nominal Voltage	Current	Nominal Power	Motorcycles	
						Ural (IMZ)	Dnepr (KMZ)
Г-11 (G-11) (P/N: 72181)	DC Generator	1941-1951	6-Volt (7-Volt)	7-Amp	45-Watts	M-72	Not Used
Г-11А (G-11A) (P/N: 72181-A)	DC Generator	1952-1957	6-Volt (7-Volt)	7-Amp	45-Watts	M-72, M-72M , M-61	M-72, M-72N, early K-750
Г-414 (G-414) (P/N: 750181)	DC Generator	1957-1974	6-Volt (7-Volt)	10-Amp	65-Watts	M-62, M-63, M-66	K-650, later K-750, K-750M, MB-750, MB-750M, MT-8, MT-9, MT-12
Г-424 (G-424) (P/N: 3701000)	Alternator (Built-in Rectifier)	1974-1998	12-Volt (14-Volt)	14-Amp	150-Watts	M-67, M67.36, IMZ 8.103 Series	MB-650, MB-650M, MT-10, MT-10.36, MT-11, MT-16
Hitachi (Limited Appearance)	Alternator/ Starter	1998-1998.5	12-Volt (14-Volt)	18-Amp	300-Watts	IMZ 8.103 and 8.107 "650" Series	Not Used
14.3771 (RPOC) (P/N: 14.3771-010)	Alternator (Built-in Rectifier & Regulator)	1998.5-2004	12-Volt (14-Volt)	35-Amp	500-Watts	IMZ 8.103, 8.103X, 8.123, 8.123X "650 & 750" Series	Not Used
Nippon Denso (P/N: IMZ-8.1037-18092)	Alternator (Built-in Rectifier & Regulator)	2004-present	12-Volt (14-Volt)	55-Amp	770-Watts	IMZ 8.103, 8.103X, 8.123, 8.123X "750" Series	Not Used

Notes:

1. Nomenclature: The Cyrillic letter "Г" transliterates (Russian-to-Latin) to "G," "L" or "T." Thus we see Г-414, G-414, L-414 or T-414, all for the same part.
2. Must never use Г-424 Alternator with discharged battery or without battery.
3. MB-750 = MW-750, MB-750M = MW-750M
4. The frame (case) of the Г-11/Г-11А generator is positive (positive-ground).
5. Г-414 Generator: P/N: 750181 6-Volt (negative ground), whereas P/N: 750181-A (positive-ground) for fitting Г-11А's into early K-750's.

Ural (Урал) - Dnepr (Днепр) Generator/Alternator Time-Line

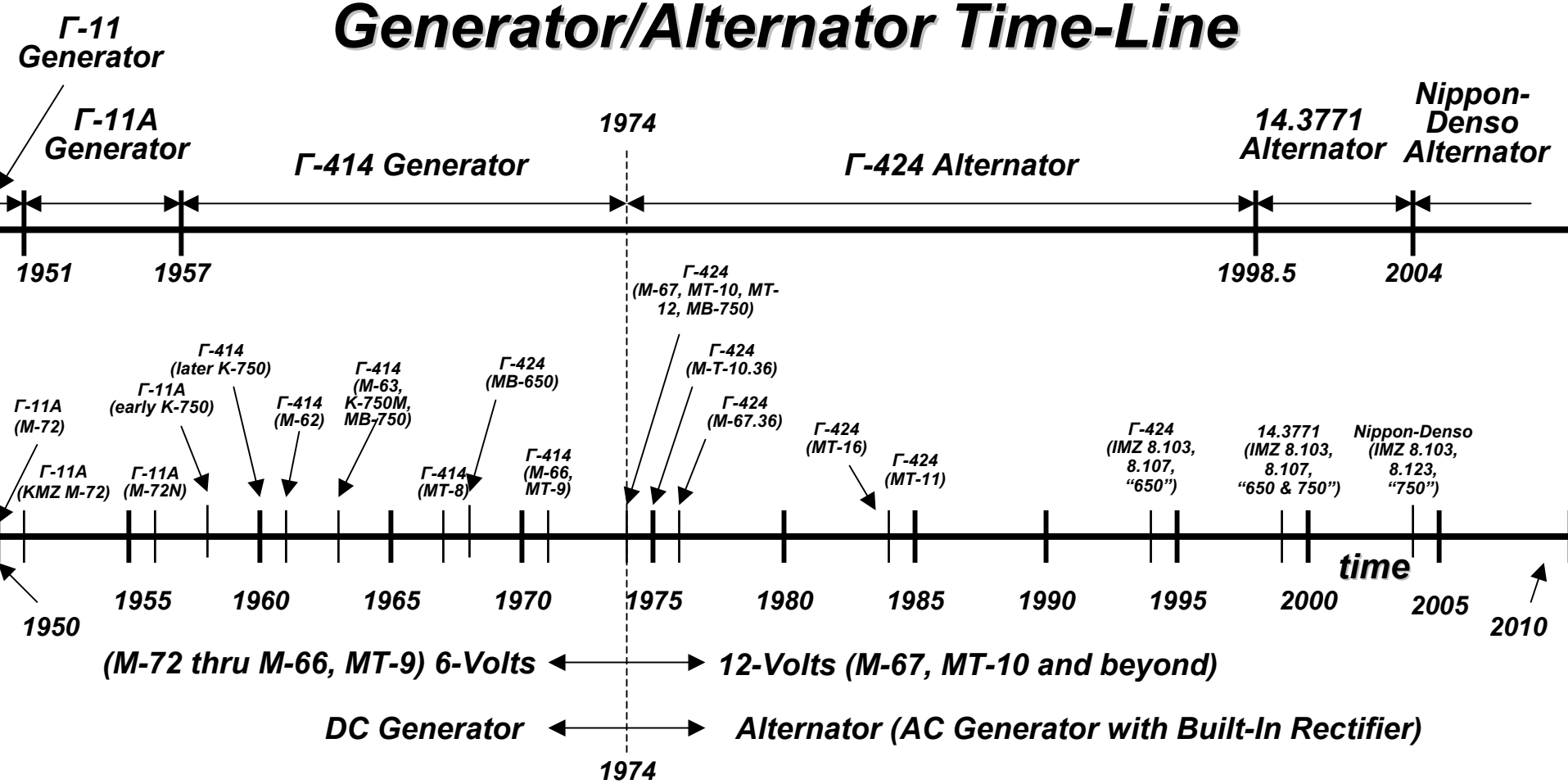

Alternators have progressed in output voltage and power; from the Г-11 (G-11) generator of 6-Volts / 45-Watts in 1941, the Г-11А in 1952, the Г-414 6V / 65 W in 1957, the Г-424 of 12V / 150W in 1974, the 14.3771 of 12V / 500W in 1998.5, to the present-day Nippon-Denso alternator of 12-V / 770W.

Recent Ural Starter/Generator/Alternator Time-line

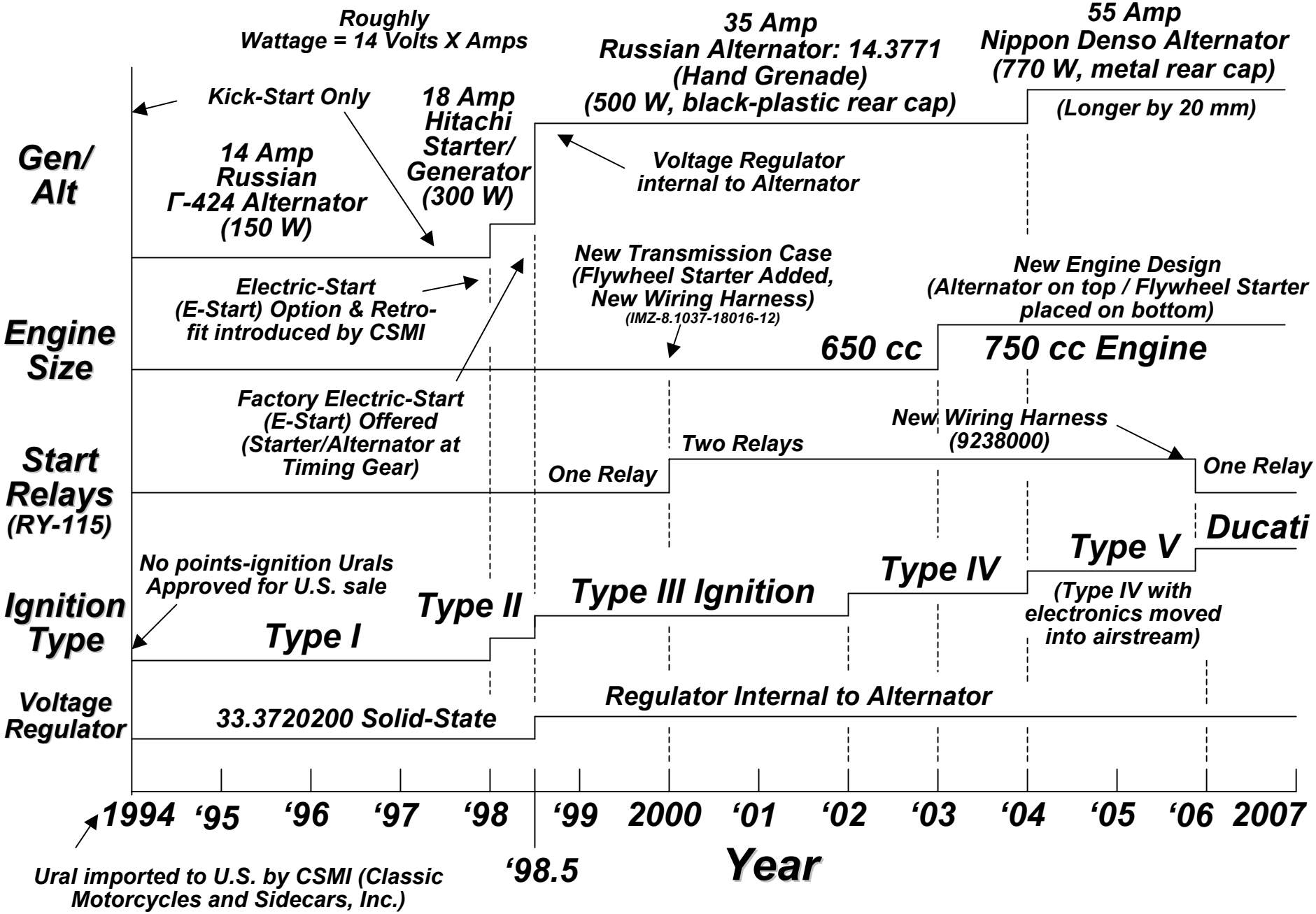

Generator vs. Alternator

- Generators
  - Magnetic Field formed by Stator (fixed magnetic field)
  - Windings of Wire (armature) Spin inside Magnetic Field
  - Generates DC on Rotor using Split Commutator
  - Brushes Carry Large Output Current
- Alternators
  - Magnetic Field formed by Rotor (rotating magnetic field)
  - Generates AC on Stator and Rectifies to Produce DC
  - Brushes Carry Steady Low-Current to Rotating Magnetic Field
  - Large Output Current from 3-Ø Stator (fixed) Winding
  - Smaller Rotor May Be Rotated at Higher RPM's
- Comparison of Generators versus Alternators
  - Generators Don't Tend to Charge at Low RPM's (idle)
  - Alternators Are Lighter and More-Compact
  - Alternator Not Designed to Charge a Dead Battery
    - Doing so May Burn It Up!
  - Generators Require Cleaning of the Commutator Every 5-kms

Thus we see that the older units (Γ-11/11A and Γ-414) were DC generators, while modern units (Γ-424, 14.3771 and the Nippon-Denso) are all alternators (AC generators with rectifiers).

Flashing the Field of the Generator

- *Generator Can Reverse Polarity if You Have a Completely Dead Battery or If You Remove the Battery from the Frame*
- *Flashing the Field Sets the Polarity of the Generator to Match the Battery*
- *Flashing the Field Can Be Done at the Generator or at the Regulator*
- *To Flash the Field on a Negative Ground System*
  - *Disconnect the Wires to the Regulator*
  - *Connect a Ground from the Frame to the Field (Ш)*
  - *Spark the Armature Terminal (Я) from the Battery +*
- *To Flash the Field at the Regulator*
  - *Use a 8” Jumper Wire (16 Gauge or Larger)*
  - *Momentarily (No Longer than 2 seconds) Touch the Jumper Wire between the Terminal Marked D+ or 61 and the Terminal Marked B+*
    - *There May Be a Brief Spark (This Is Normal)*
  - *Caution: Do Not Touch the Jumper Wire to Terminals F or DF or to Ground*
  - *Start Vehicle and Check Charging System for Proper Operation*

Г-11 and Г-11А (G-11 & G-11A) 6-Volt Generator (1941-1957)

- 6-Volt / 7-Ampere / 45-Watt Generator
- Positive-Ground Case
- Used on;
  - –Ural (IMZ): M-72, M-72M, M-61
  - –Dnepr (KMZ): M-72, M-72N, early K-750
- Used in Conjunction with PP-1, PP-30, PP-31 and PP-31A Regulators

Г-11 and Г-11А 6-Volt Generator Cross-Section

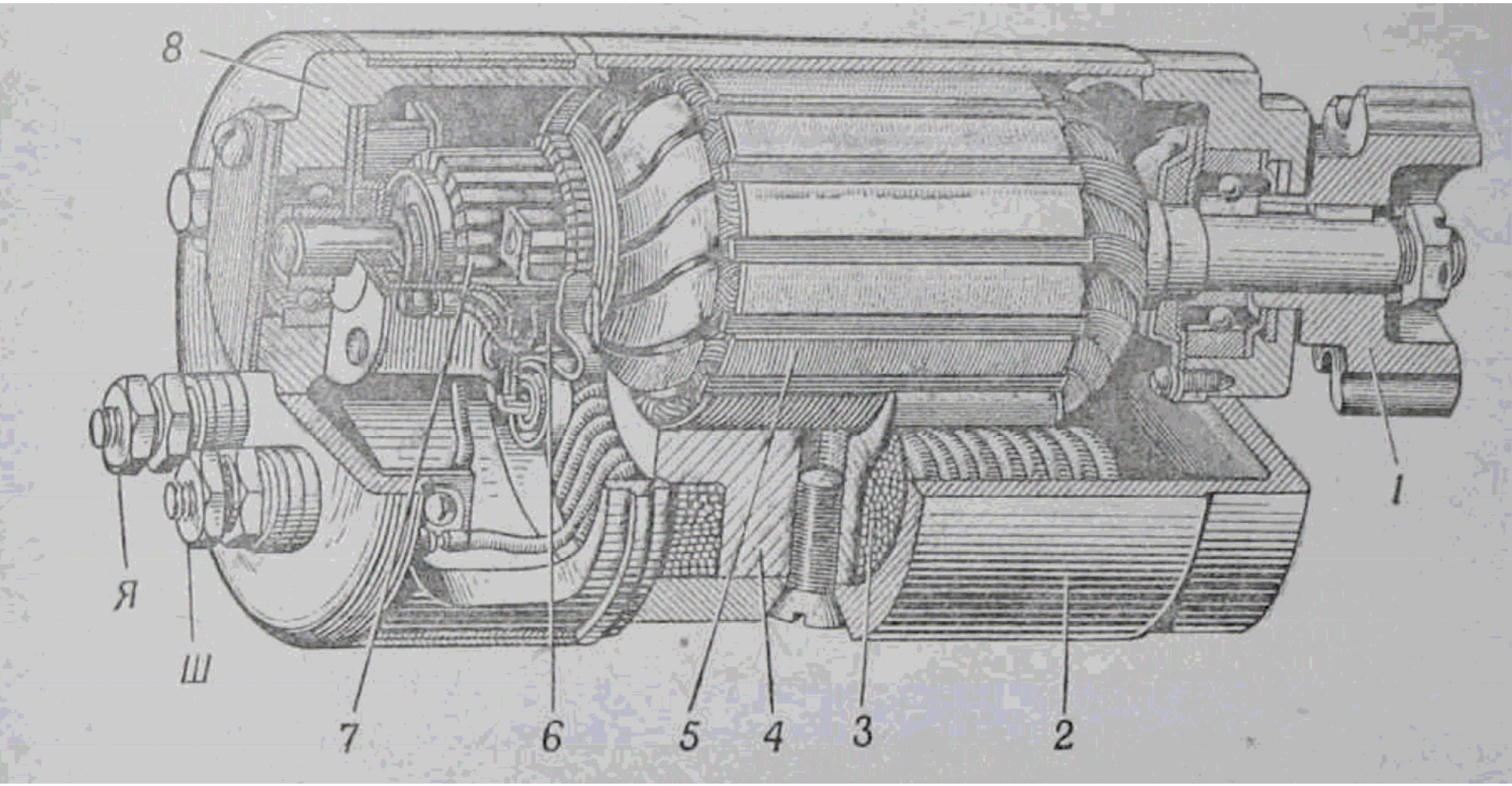

1. Pinion Drive
2. Armature
3. Armature Winding
4. Pole Extension or Shoe
5. Rotor
6. Carbon Brush
7. Commutator
8. Case

Г-11А (G-11A) Generator

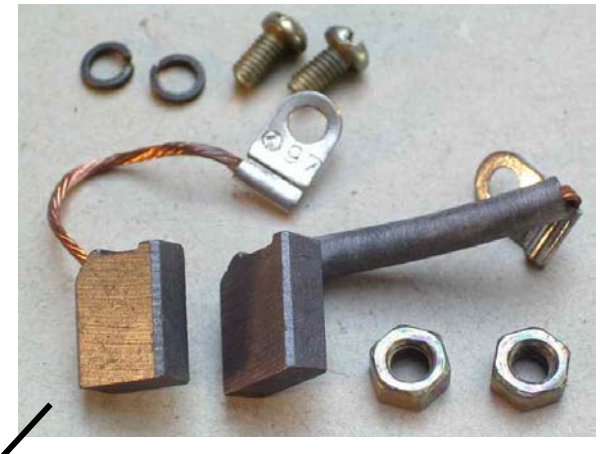

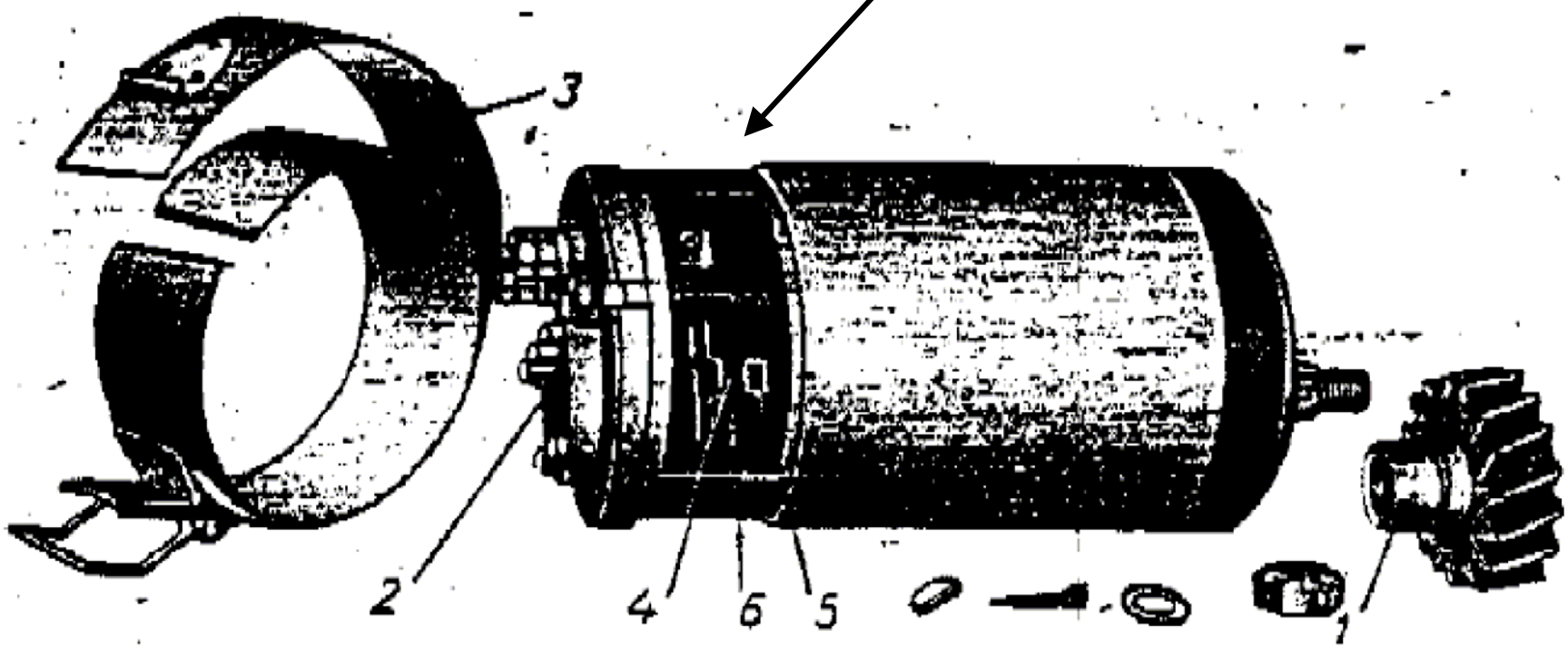

1. Drive Gear 2. Rotor 3. Band/Clamp 4. Brush Holder 5 Brush 6. Stator

Г-11 and Г-11А 6-Volt Generators

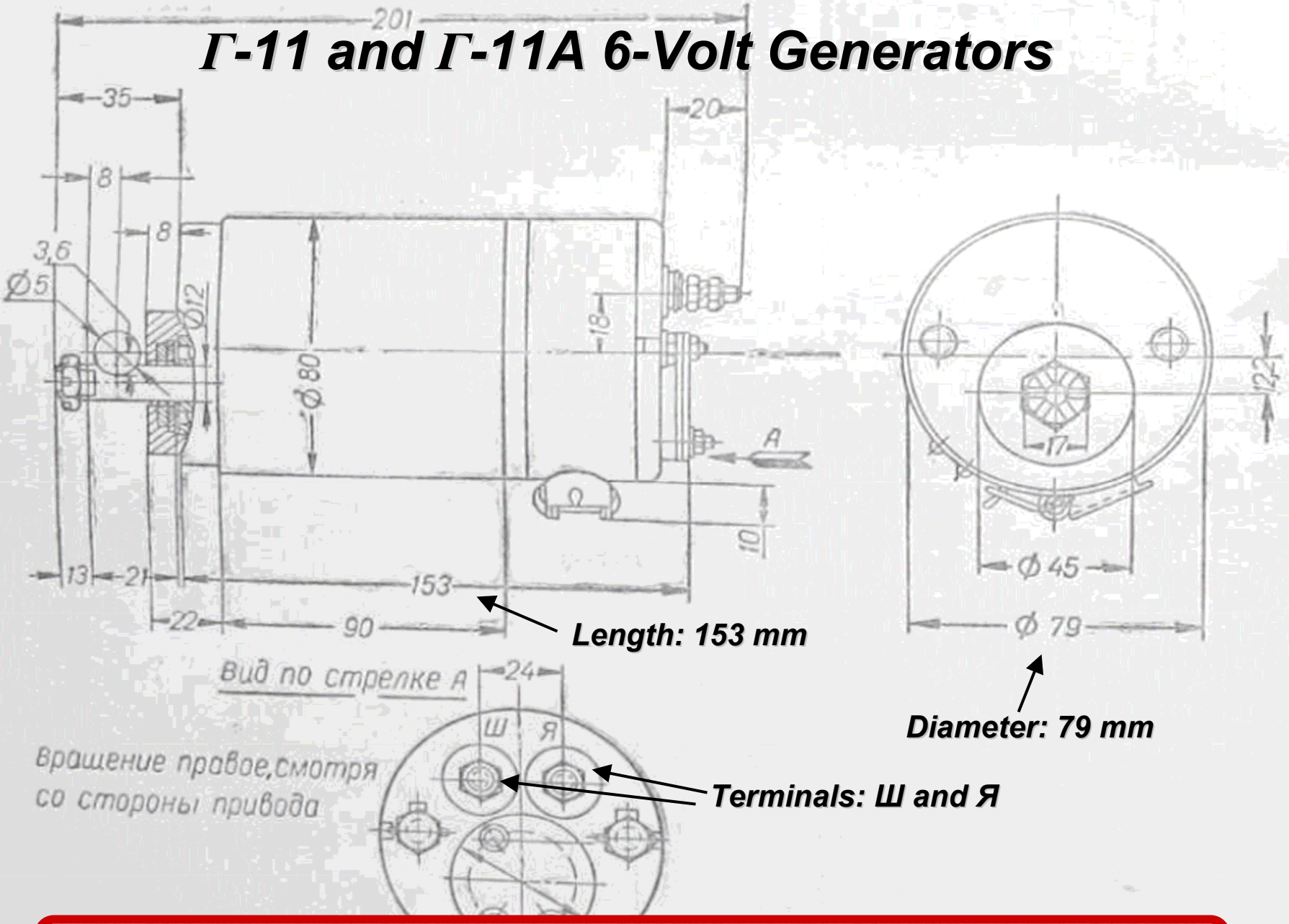

The rotor is <u>eccentrically</u> located to allow a controlled meshing of the gears by minor rotation and clamping of the case.

Г-11А mounted on an М-72 (www.oldtimergarage.szn.pl)

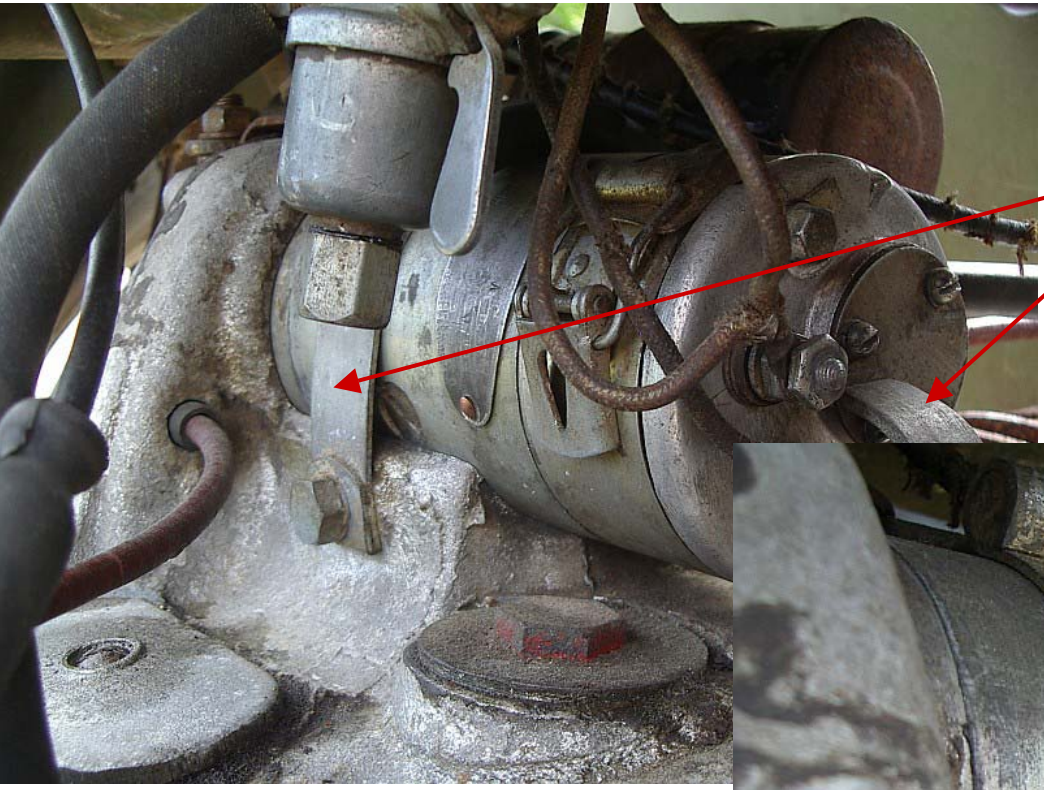

Mounting Straps

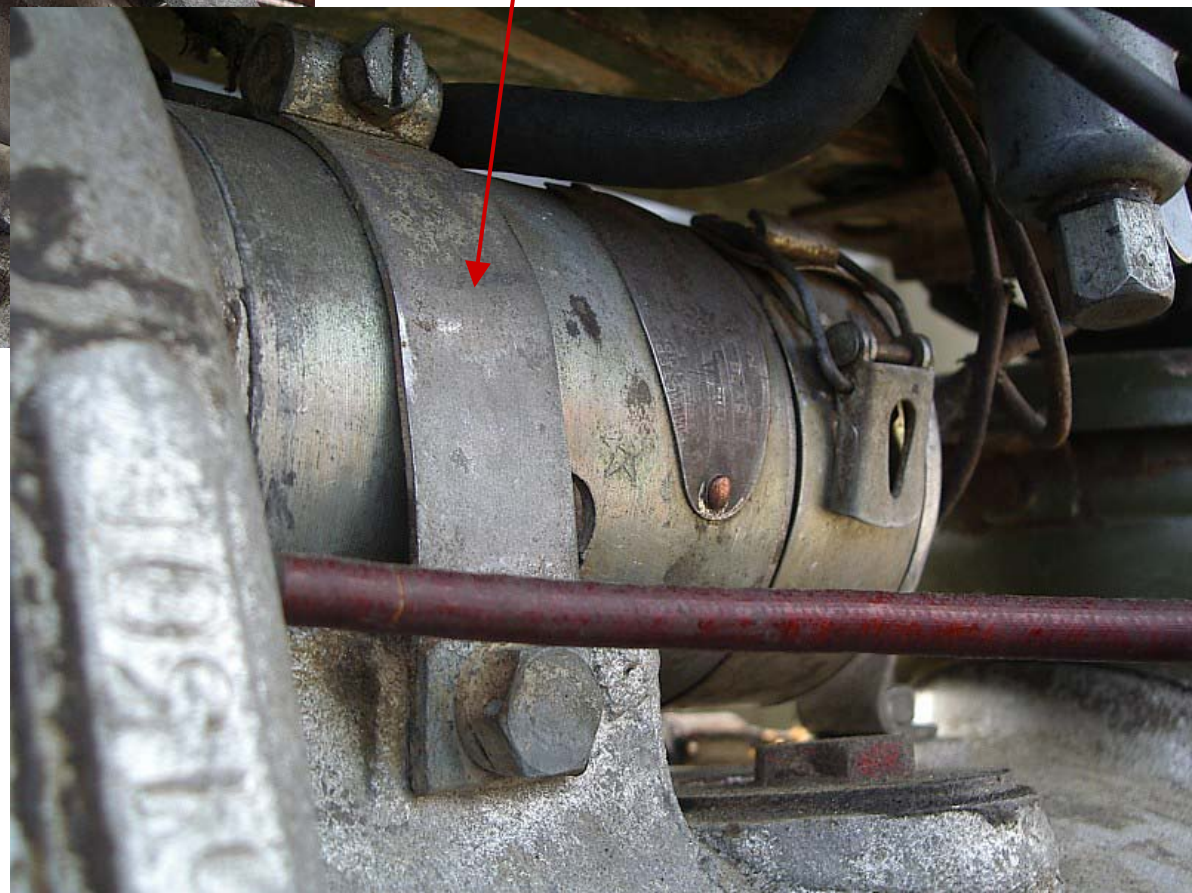

Side-View of M-72M with Г-11А Generator

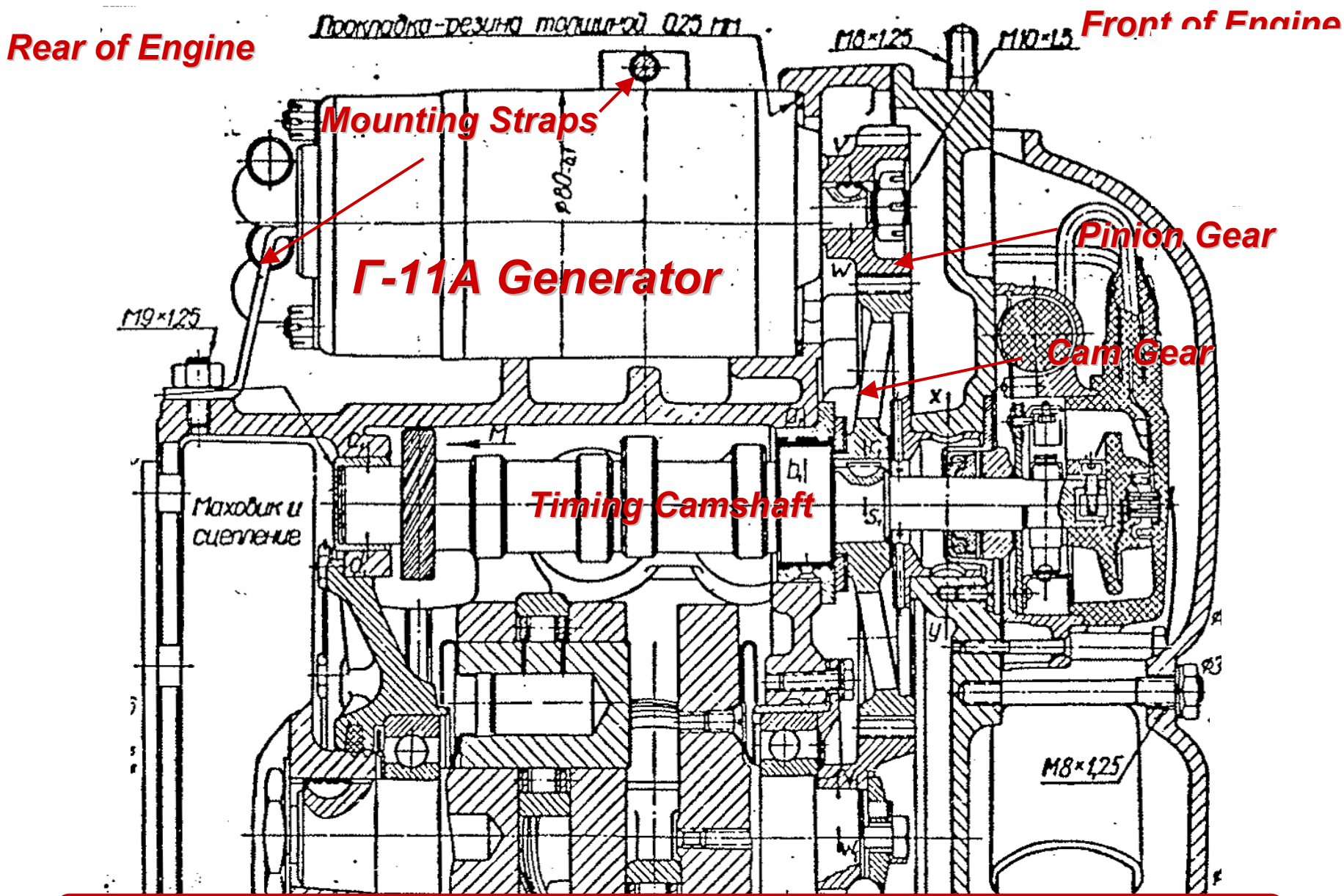

The Г-11А generator is driven off a gear mounted on the timing cam.

M-72M Side-View Showing Г-11A Generator

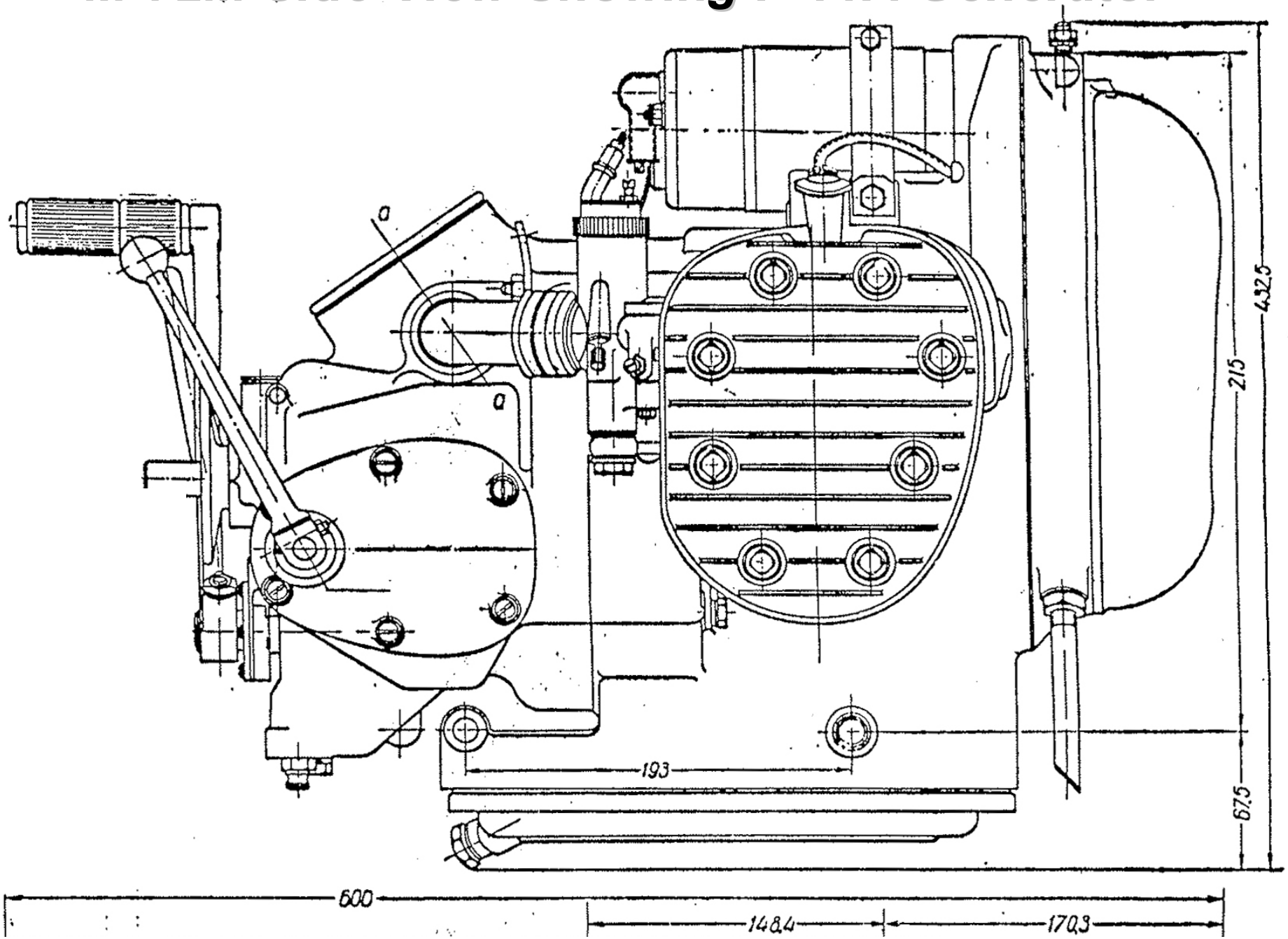

M-72M Top-View Showing Г-11А Generator

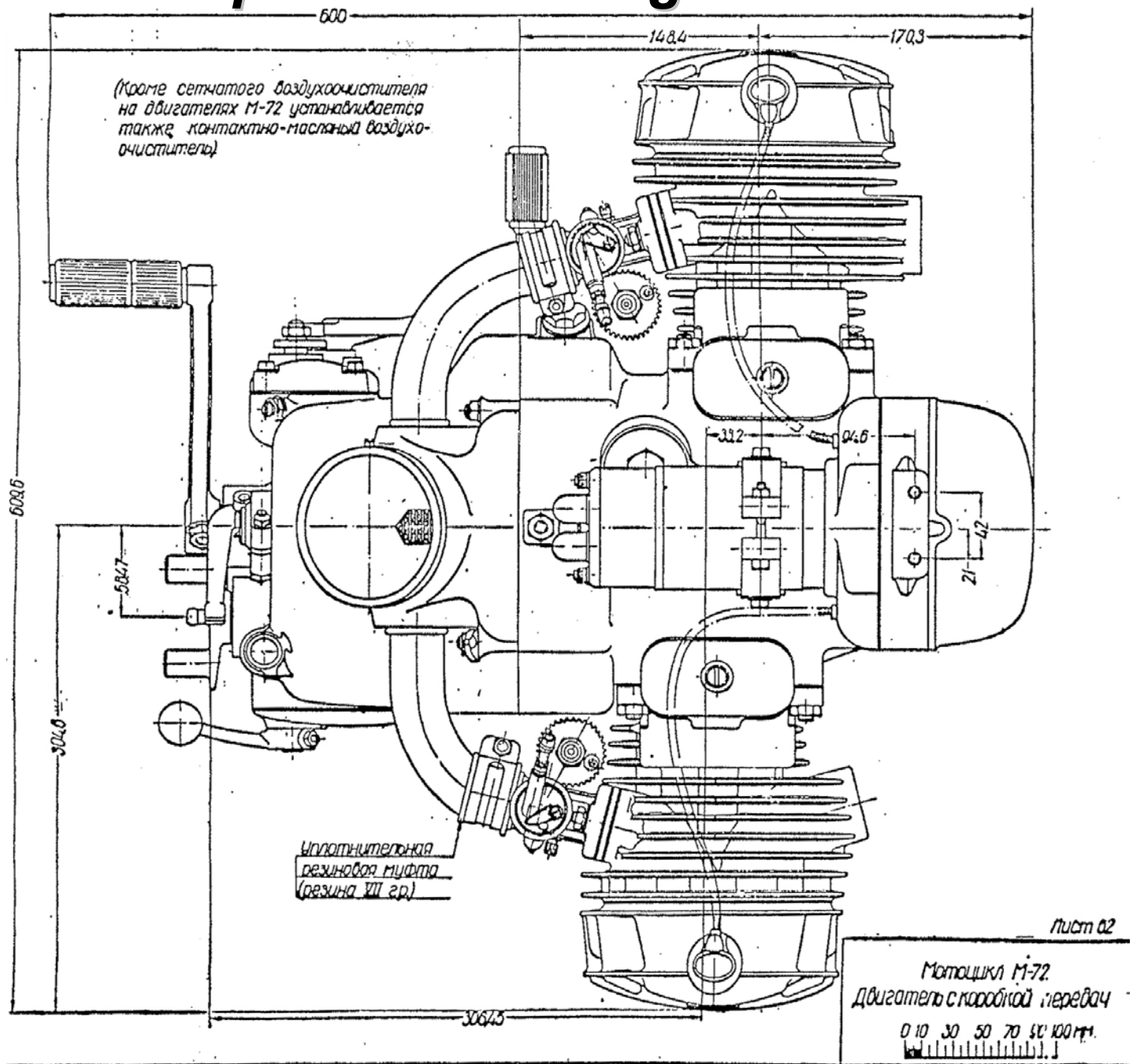

Г-414 (G-414) 6-Volt Generator (1957-1974)

- 6-Volt / 10-Ampere / 65-Watt Generator
- Rotor Speed: 1,350 rpm (6.5-V, 0-A), 1,950 rpm (10-A)
- Used on;
  - –Ural: M-62, M-63, M-66
  - –Dnepr: K-650, later K-750, K-750M, MB-750, MB-750M, MT-8, MT-9 & MT-12
- Negative-Ground Case
- Works in Conjunction with PP-302 Regulator

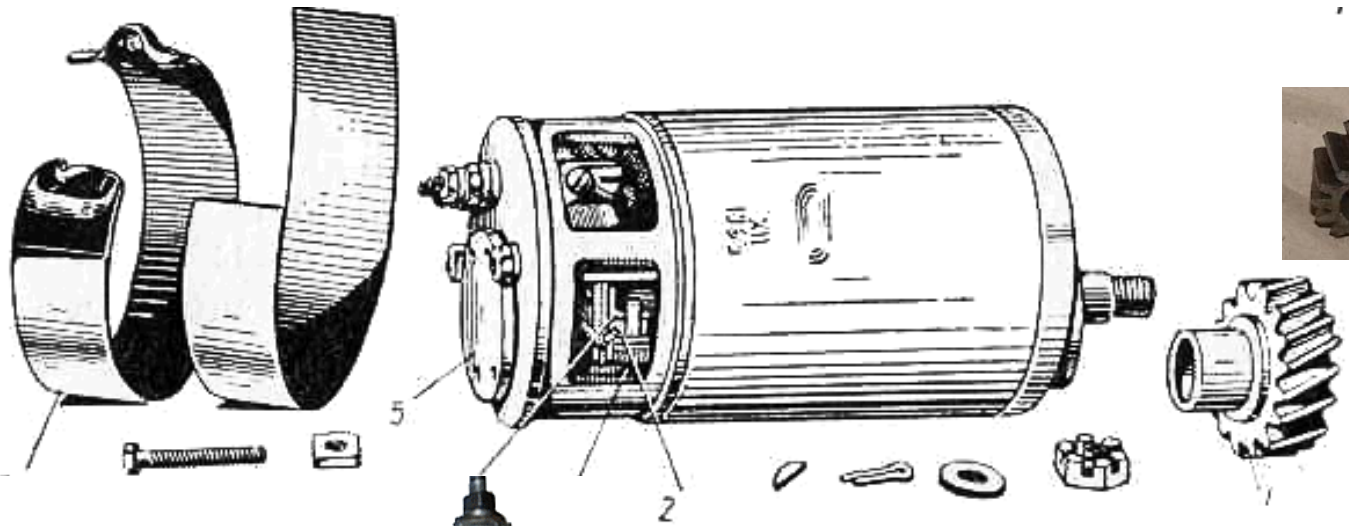

Г-414 Generator

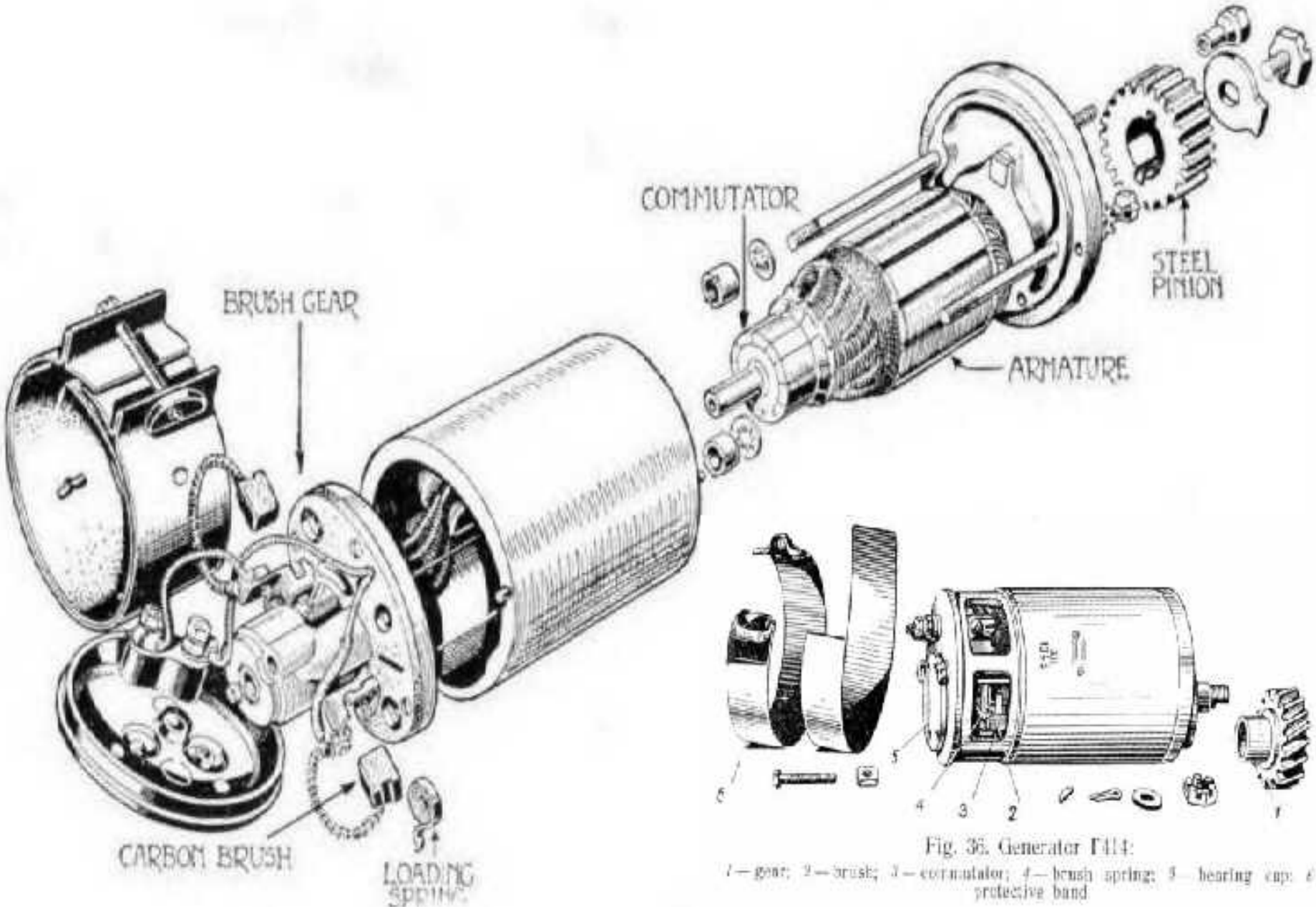

Fig. 36. Generator Г414:
1 — gear; 2 — brush; 3 — commutator; 4 — brush spring; 5 — bearing cap; 6 — protective band

Generator (Г-414) Specifications

- Rated Voltage: 6-Volts
- Full output current: 10-Amperes
- Direction of Armature Rotation (viewed from the drive side): Right-Hand
- Rotational Speed of Armature, Ensuring a Voltage of 6.5 V, at Ambient of 20°C
  - –at zero load: 1350 rpm
  - –at full load (10 A): 1950 rpm
- Idle current (with the generator operating as a motor): 6-Amps
- Polarity of the frame (ground): minus
- Generator Winding Data
  - –Field Coil
    - Wire: copper, enamelled, grade size: 0.74 mm
    - Winding: CCW
    - Number of turns: 300
    - Number of layers: 24
    - Insulation, half-overlapping, one layer of tafieta tape: 0.25 x 15 mm
    - Output terminals Markings: "Я" and "Ш"
  - –Generator Armature
    - Wire: copper
    - Insulation: two layers of high strength enamel, size: 1.16 mm
    - Number of turns in the section: 5
    - Number of wires in the slot: 20
    - Number of sections 2
    - Number of slots 14
    - Number of commutator sheets 28
    - Slot pitch 1-7
    - Commutator Sheet Pitch: 1-2

The Г-414 is a d.c. shunt excitation generator.

Г-414 6-Volt Generator

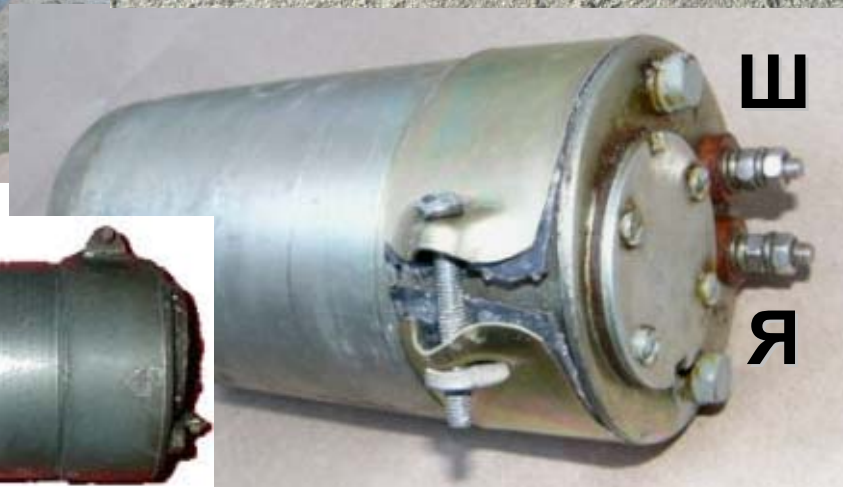

Г-414 Generator for Dnepr MT-9, K-750, K-650 and Ural M-62, M-63, M-66

- *Polarity: Negative Ground*
- *Direction of Rotation (drive side): Right-Hand (clockwise)*
- *Weight: 3.8 kg*

Г-414 6-Volt Generator

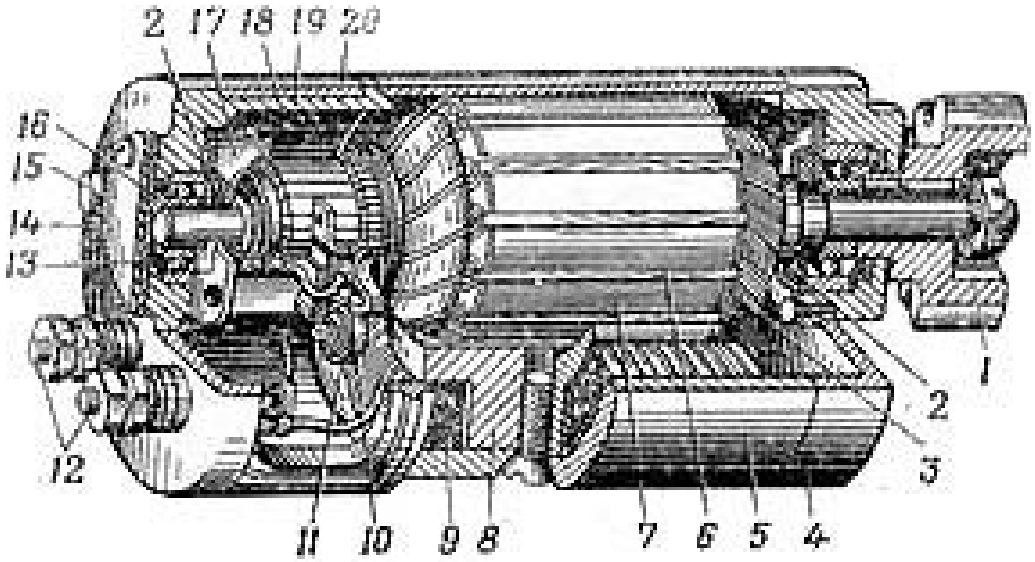

Pinion Drive

1 - pinion drive (gear)
2 - oil seals bearings
3 - armature winding of 28 coils
4 - front cover
5 - case
6 - wooden wedge into rotor groove
7 – rotor (armature)
8 - pole extension or shoe
9 – excitation (field) winding
10 - carbon brush
11 - spring brushes
12 – terminals
13 - ball bearing
14 - ball bearing cover
15 - stud
16 - armature shaft
17 - brush holders
18 - commutator
19 - back cover
20 - protective tape

Later alternators, with their more-compact rotors, are able to generate current at higher geared speeds, to allow charging even at idle. They are also able to handle higher power in the stator windings, without the limitations and wear of the brushes.

Г-414 (G-414) Generator

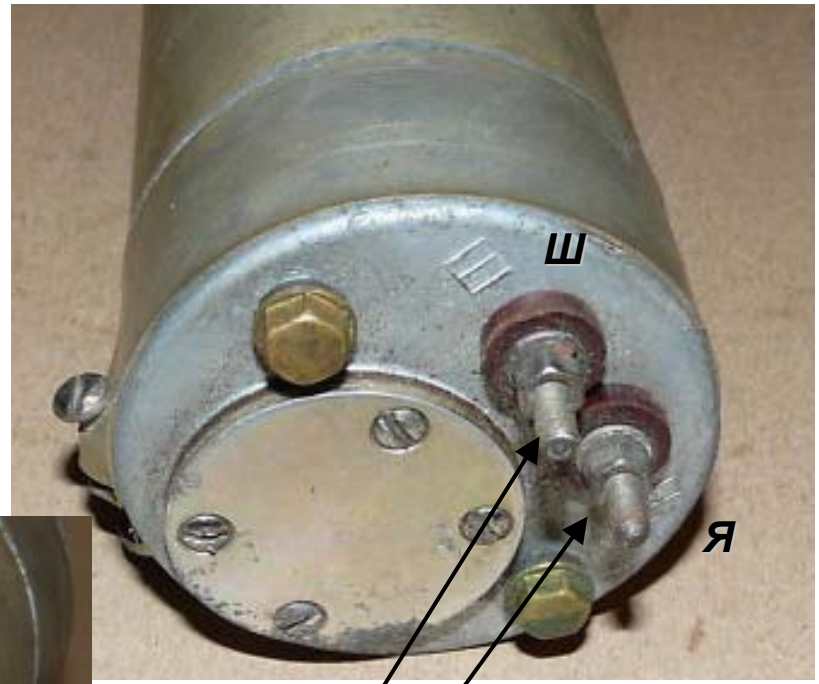

Terminals: Ш and Я

Г-424 (G-424) 12-Volt Alternator (1974-1998)

- 12-Volt / 11-Ampere avg. 14-Ampere max. / 150-Watt Alternator
- First Used on Ural M-67 and Dnepr MT-10
- Total Capacity Doubled Improved Lighting
- Maximum Short-Term Overload: 200 W
- Rotor Speed:
  - Begins to Produce Voltage (no load) at Speed of 1000-1100 rpm, corresponding to 750-850 rpm Engine Crankshaft Speed
  - 1,300 rpm (14-V, 0-A), 2,400 rpm (11-A), 5,000 rpm (Max)
- Used on;
  - Ural: M-67, M-67.36, IMZ 8.103 Series
  - Dnepr: MB-650, MB-650M, MT-10, MT-10.36, MT-11, MT-16
- Used in Conjunction with Mechanical PP-330 & Solid-State 33.3702 Regulators
- 3-Ø (three-phase) Generation, 12-Pole Construction
- Built-in Rectifier: MSF-2A (ВБГ-2А)

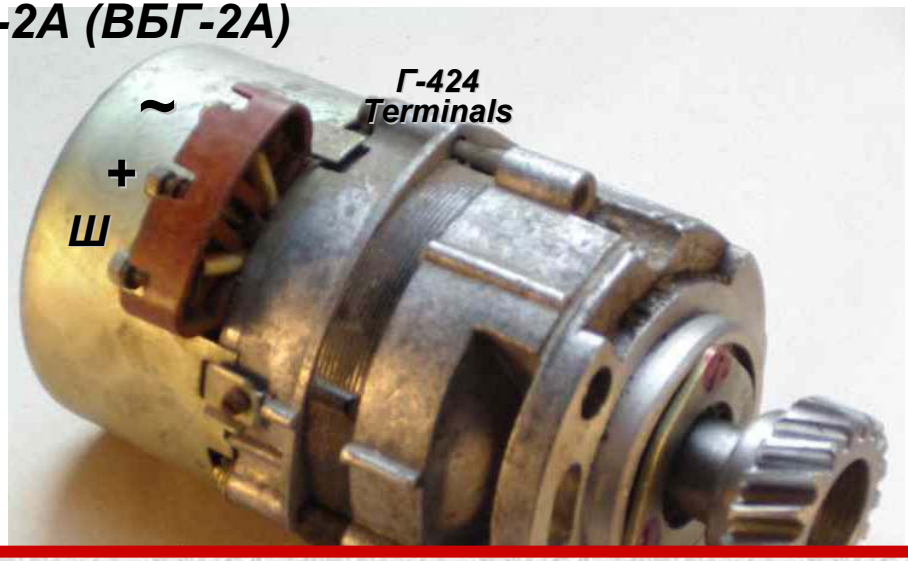

The higher-output capability of the Г-424 alternator was needed to provide a migratory path for electric-start.

Г-424 (G-424) Alternator and Terminal Identification

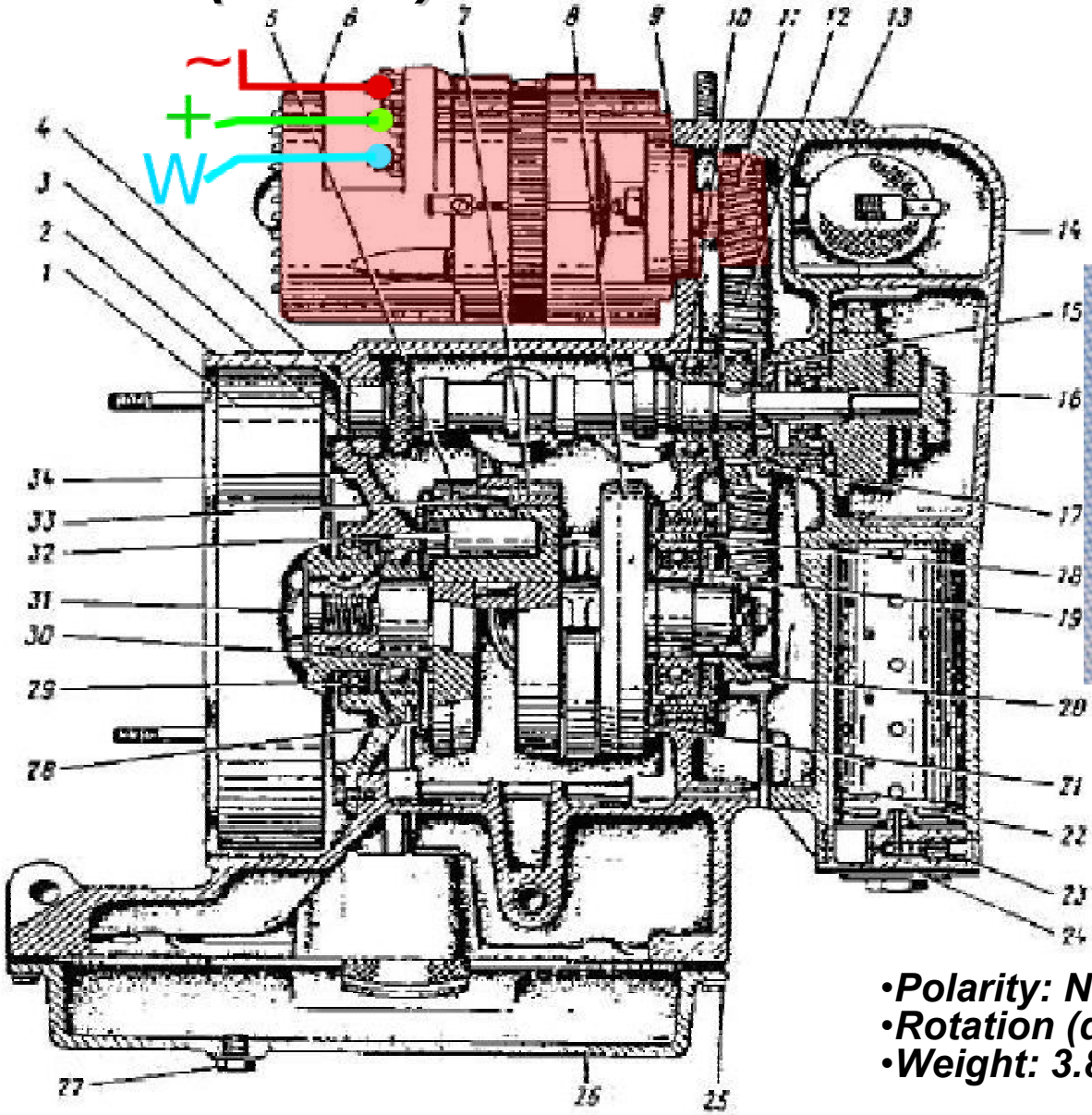

1- ~
2- +
3- ш

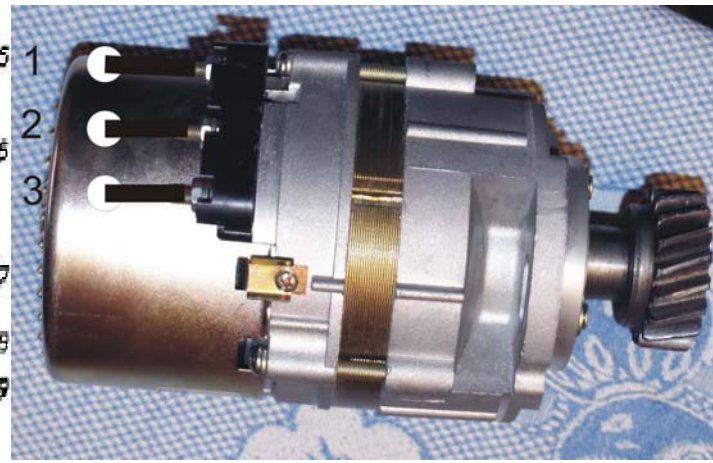

- *Polarity: Negative Ground*
- *Rotation (drive side): Right (clockwise)*
- *Weight: 3.8 kg*

This diagram is handy <u>because</u> the terminals are unlabelled.

650cc Engine with 14-Amp Γ-424 Alternator

The 14-Amp Γ-424 alternator has a thin pressed sheet-metal shroud covering the rear half, while the later 35-Amp 14.3771 alternator has a thicker cast aluminum housing.

Structure and Features of the Г-424 Alternator

- Front Cover (1), from Drive Side, Has Adjustable Eccentric Cylindrical Rotor Axis
- Drive-Side Has Rubber Gasket (2) for Environmental Protection
- Internal Bearings Lubricated with Single- and Double-Sided Seals
- Rotor (3) Rotates with Windings Excitation Powered Via Slip Rings
- Three-Phase (4) Stator Winding Connected into a Star with Insulated Neutral
- All Phases Soldered to Head Bolts Fastening Rectifier Unit (8)
- Two Covers, End Shield (6) and Stator Fastened with Three Screws MB
- Brush with Wire Attached to Plate and Holder (7) with Six Captive Screws
- Integrated Semiconductor (8) Rectifier Unit type MSF-2A
- Rectifier Unit (8) Consists of Three Monoblocks, Cast Aluminum Heat Sink Fins
- Axial Fan (9), under Protective Cover (10) on Rotor Shaft (3), Cools Rectifier
- Terminal Block (5) for Connection to Alternator

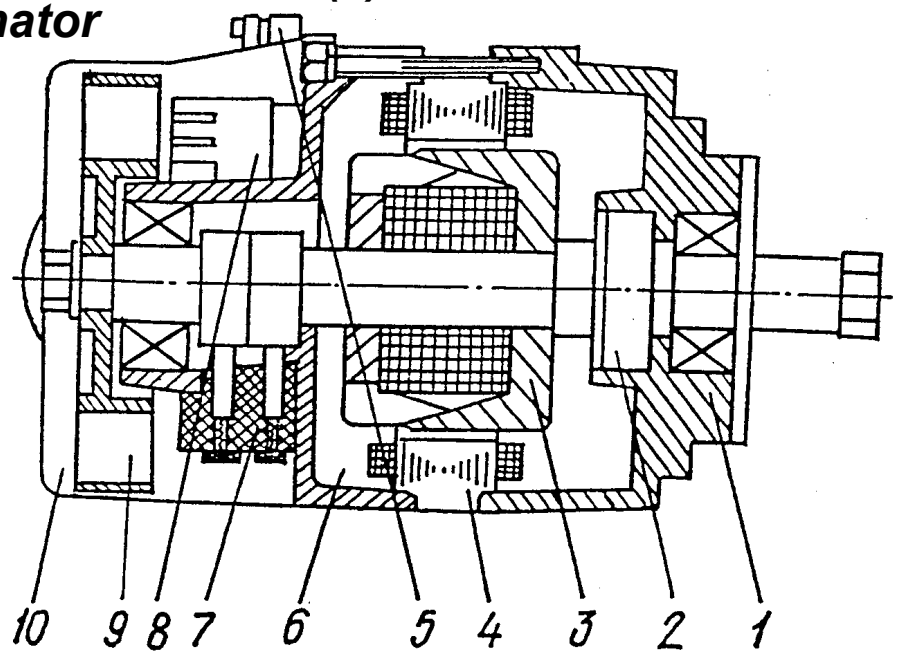

Fig. 40. Generator Г-424:

1 — end shield; *2* — rubber collar; *3* — rotor; *4* — stator; *5* — terminal block; *6* — end shield; *7* — brush holder; *8* — rectifier unit; *9* — axial fan; *10* — guard

Construction of Г-424 Alternator

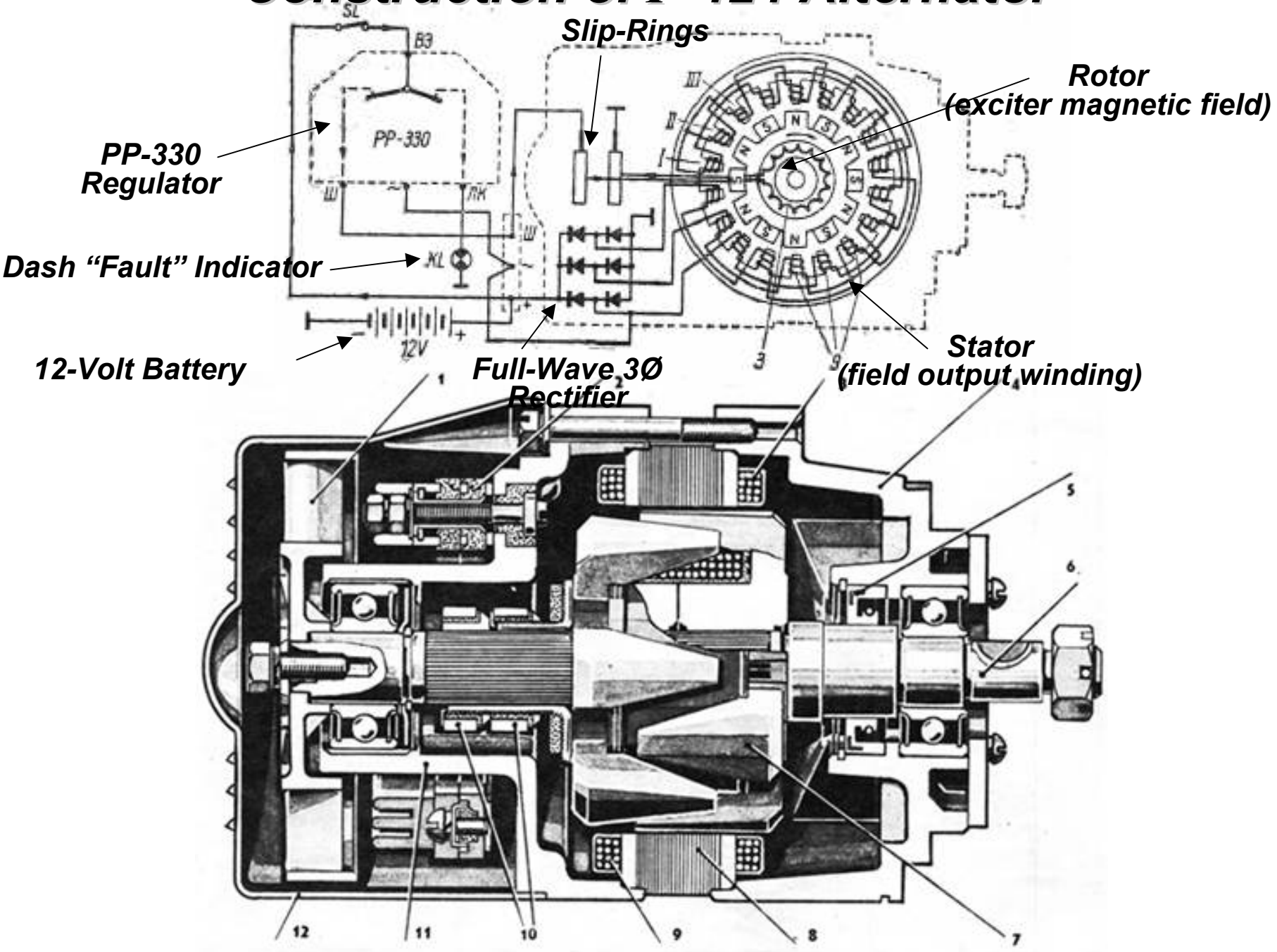

Г-424 Alternator 12-Volts/11-Amp/150-Watt

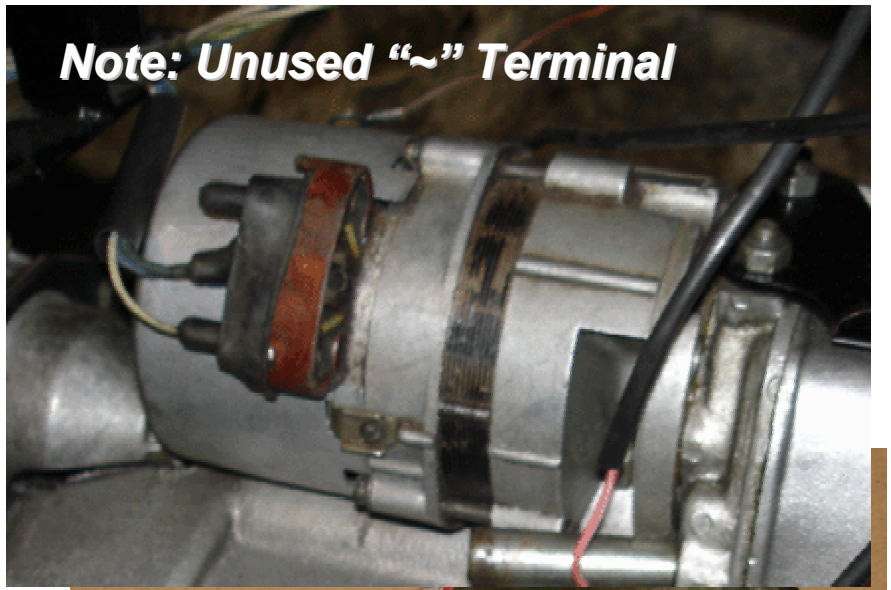

The concentrically-located rotor shaft is made for the newly-designed engine case.

Г-424 Alternator Parts Breakdown

Pinion Gear

Г424-3701000-02

Г424-3701095-04
Г424-3701095-03
Г424-3701095-05
220078-П29
252133-П29
Г424-3701030-04
Г424-3701020-04
Г424-3701408
252132-П29
Г424-3701002
Г424-3701015-03
Г424-3701100-01

Brushes

Г424-3701090-02
220079-П29
252133-П29
250464-П29

Stator

ДР-100-3752012
Г424-3701092-01

Terminal Block

Г424-3701003
252004-П29
252134-П29
222815-П29
252133-П29
250464-П29

Г424-3701408

Rotor

250959-П29

Г424-3701216
Г424-3701214
N 18503
Г424-3701200-02
Г424-3701300-01

Rectifier

ДР-100-3752012
ВБГ-2АТЭ
220078-П29
252133-П29
Г424-3701009
Г424-3701006

Г424-3701400-01

221578-П29
Г424-3701402
N 18503
Г424-3701401-01
40×22×10

Plastic End-Cap

222747-П29
252132-П29
Г424-3701007

201419-П29
252134-П29
Г424-3701011
Г424-3701008

Application of Г-424 with PP-330 Regulator

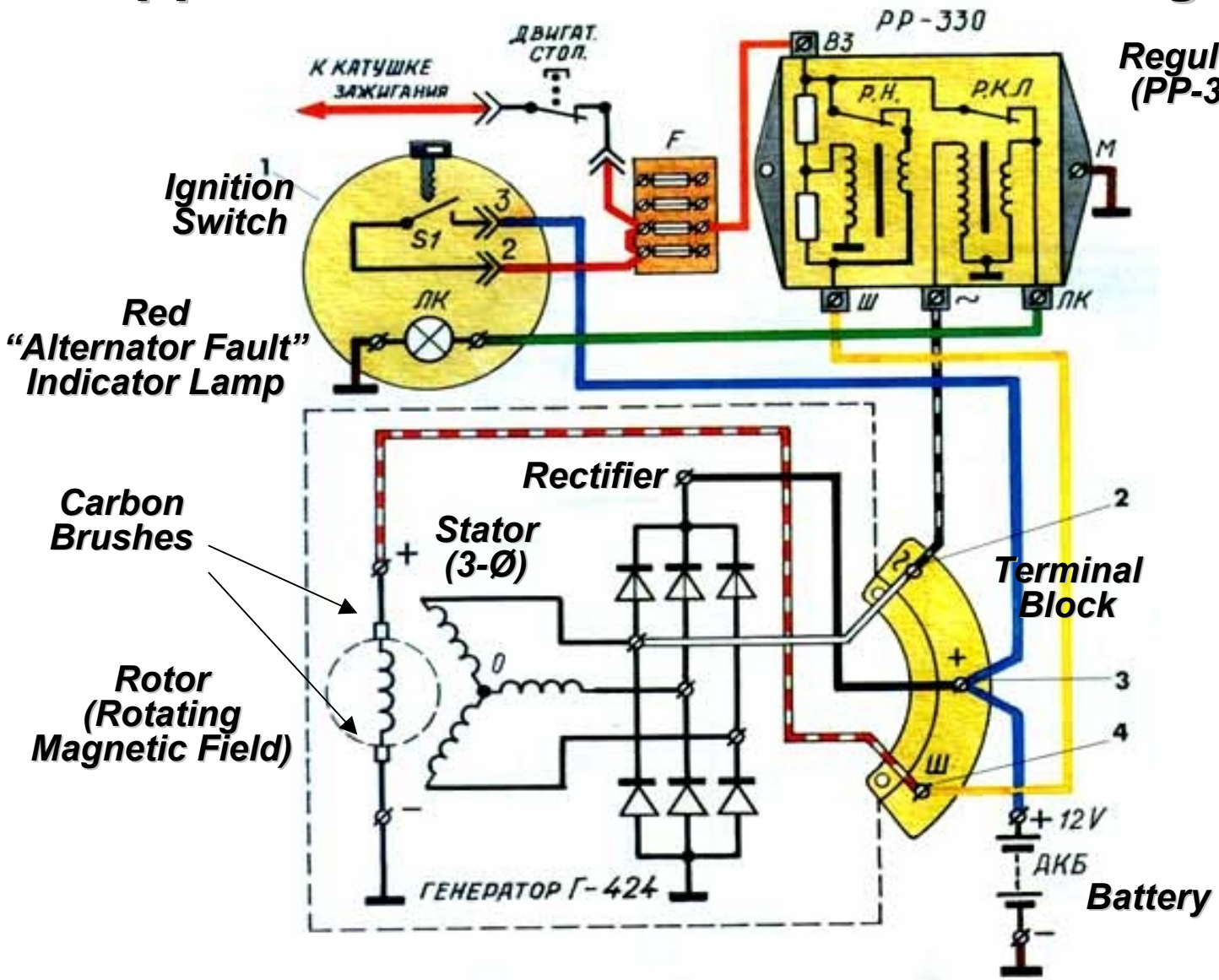

The 3-Ø (three-phase) winding produces three waves, 120° apart, for a more continuous supply of current.

MT-11 and MT-16 Alternator/Regulator Circuitry

Fuse Block

to Ignition Module thru Kill Switch

B3 (BZ)

PP-330
(RR-330)

ЛК (LC) ~ Ш (W)

Alternator Fault Indicator (Dash)

Ignition Switch

Master Switch (deleted for electric-start)

Г-424 (G-424) Alternator

+ ~ Ш

\+ -

6MTS-9 (12-Volt) or 2X 3MT-6 (6-Volts each)

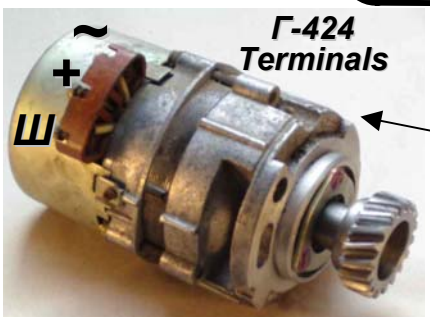

~ + Ш

Г-424 Terminals

Diagram is useful when unmarked wires are removed from unmarked terminals!

Fuse Block

to Ignition Module thru Kill Switch

33.3702

ЛК (LC) Ш (W) +

Alternator Fault Indicator (Dash)

Ignition Switch

~ (not used)

Master Switch (deleted for electric-start)

Г-424 (G-424) Alternator

+ ~ Ш

\+ -

6MTS-9 (12-Volt) or 2X 3MT-6 (6-Volts each)

'+' (output) goes to the battery
'W' (field) goes to the regulator
'~' is not used. Used only with the old electromechanical regulators (PP-330).

Г-424 Alternator Parts

- *Alternator Consists of Three Main Parts; Stator, Rotor and Covers*
  - *Stator Pack (8):*
    - *Sheet Electrical Steel, Thickness 1 mm, with 18 Teeth*
    - *Three-Phase winding, Wye-Connected*
    - *Each of 18 Coils: Wound Wire TCPI-2, diameter 1.08 mm*
  - *12-Pole Rotor*
    - *Maximum Excitation Current at 14-Volts: 1.2-Amperes*
    - *Rotor Shaft (6) and Slip Rings (10)*
  - *Cast Aluminium Alloy Covers (4 and 11) Enclose;*
    - *Rectifier Unit: MSF-2A*
    - *Non-Conductive Holder and Clamps with Three Labels*
    - *Cover (4) and Gasket Set (5) Protect Cavity from Crankcase Oil*

Г-424 (G-424) Alternators

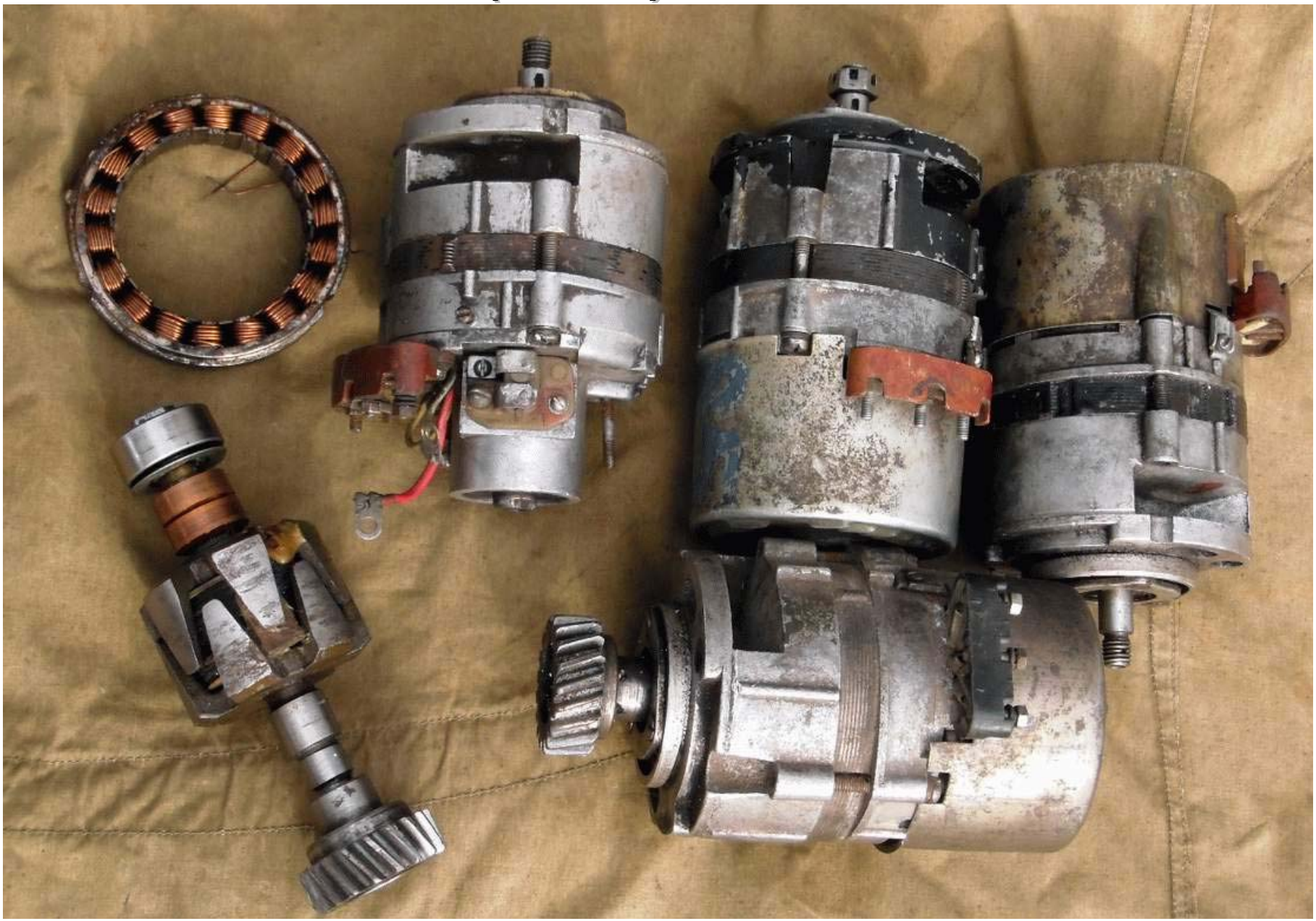

Г-424 Alternator

Part #	Description	Quantity
Г424-3701006	Casing	1
Г424-3701007	Clamp	2
Г424-3701008	Fan	1
Г424-3701011	Bushing	1
Г424-3701015	Brush Holder	1
Г424-3701020	Brush	1
Г424-3701030	Brush	1
Г424-3701090	Terminal block	1
Г424-3701100	Stator with Windings	1
Г424-3701200	Rotor	1
Г424-3701300	Cover	1
Г424-3701400	Cover	1
ВБГ-2А	Unit	1
1-22x40-1	Gland	1
180503К1	Bearing	2
201419	Bolt M6x18	1
222747	Screw M4x8	2
222815	Screw M6x50	3
250464	Nut M5	3
250959	Nut M12	1
252003	Washer 5	3
252004	Washer 6	3
252132	Washer 4Н	2
252133	Washer 5Л	3
252134	Washer 6Л	4

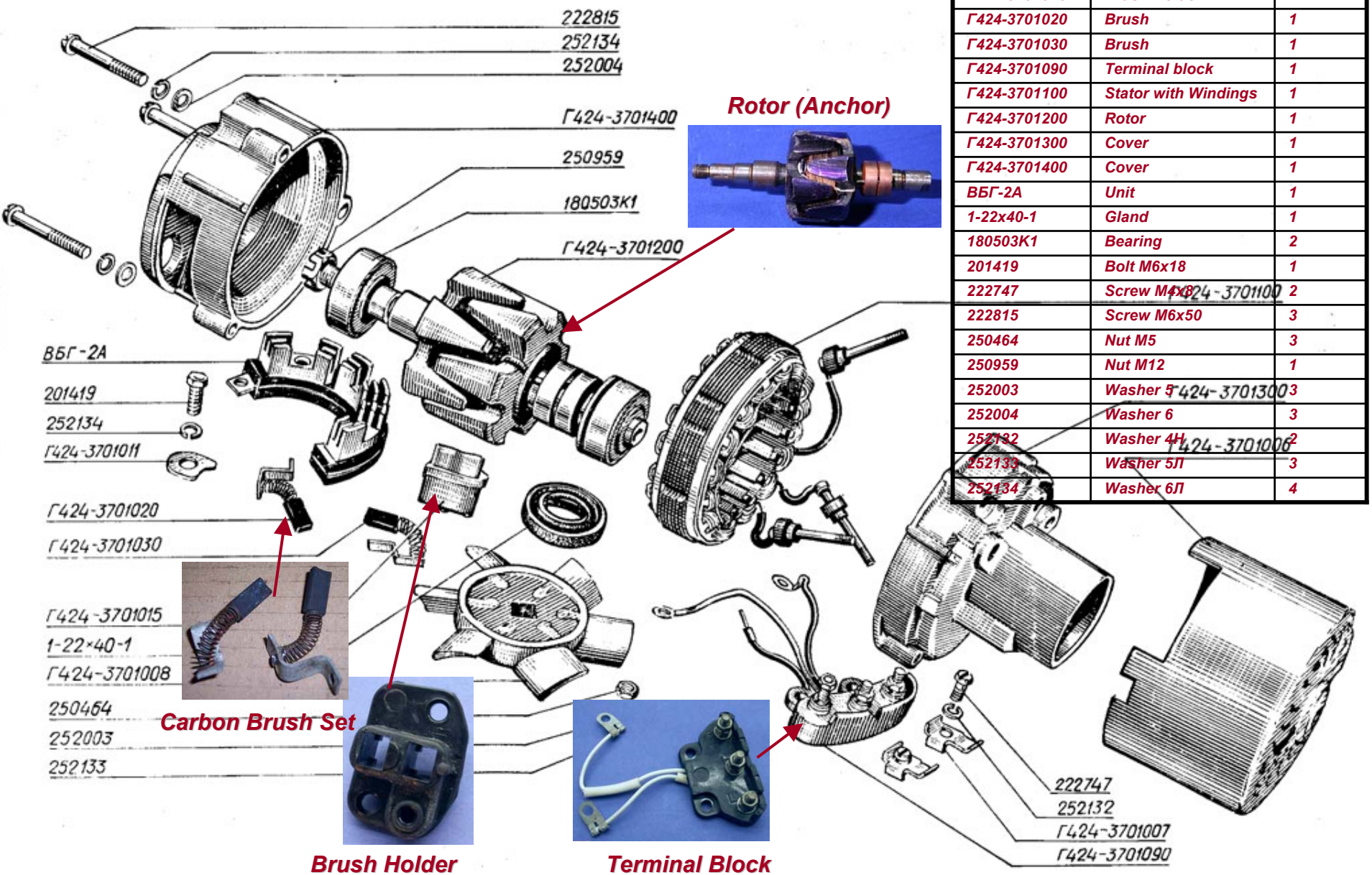

Rotor (Anchor)

Carbon Brush Set

Brush Holder

Terminal Block

14.3771 12-Volt Alternator

- 14-Volt / 35-Ampere / 500-Watt Alternator
- 3-Ø Windings for More-Continuous Delivery of Current
- Same Dimensions of Previous Alternator (Г-424)
  - –Uses Same Pinion Gear from Г-424
  - –Adjust for Minimum Trashing of Gears
  - –Little or No Back-Lash
- For motorcycles;
  - – Ural: 8.103, 8.103X, 8.123, 8.123X, “650 and 750” Series
  - –Dnepr: Not Used
- Replacement for the Short-Lived 18-Amp Hitachi
- Developed for Greater Power (needed for Electric-Start option)
- Built-In Voltage Regulator (YA212A11E)

The 14.3771, 12-Volt alternator (affectionately known as the RPOC) developed a bad reputation for exploding and often taking the engine with it, hence the term “Russian hand-grenade”.

14.3771 12-Volt Alternator

14.3771 12-Volt Alternator Application

36.3702 Regulator
(Я212А11Е / YA212A11E)

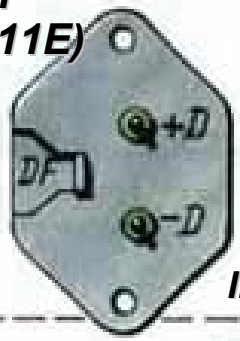

Ignition Switch

Red "Alternator Fault" Indicator Lamp

Parallel Resistor (in case lamp blows)

Carbon Brush

Built-In Regulator

Full-Wave Rectifier

Stator (3-Ø)

Rotor (Rotating Magnetic Field)

Carbon Brush

Battery

Ural 650/750 Starter/Alternator Circuit (2002-2003) (01/11)

(IMZ-8.103717001-13, 2002 & 2003 Owners Manuals) eafranke@tampabay.rr.com

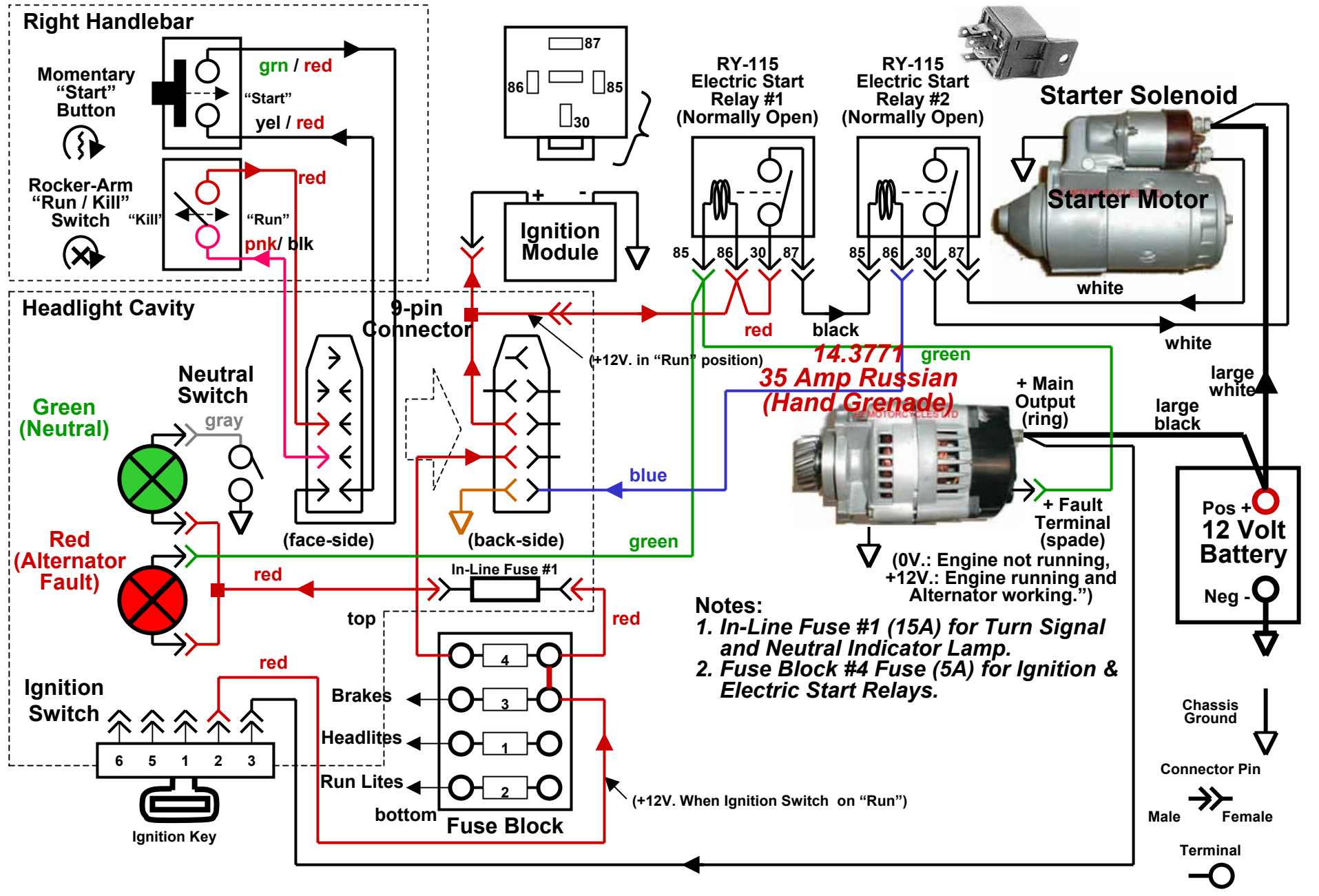

Nippon-Denso 12-Volt Alternator

- 14-Volt / 55-Ampere / 770-Watt Alternator
- Used On;
  - –Ural: 8.103, 8.103X, 8.123, 8.123X, “750” Series
  - –Dnepr: Not Used (retro-fittable to Г-424 applications)
- Built-In Voltage Regulator

The Nippon-Denso 12-Volt alternator has been installed on all Ural bikes since 2004.

Parts Breakdown of Nippon-Denso Alternator

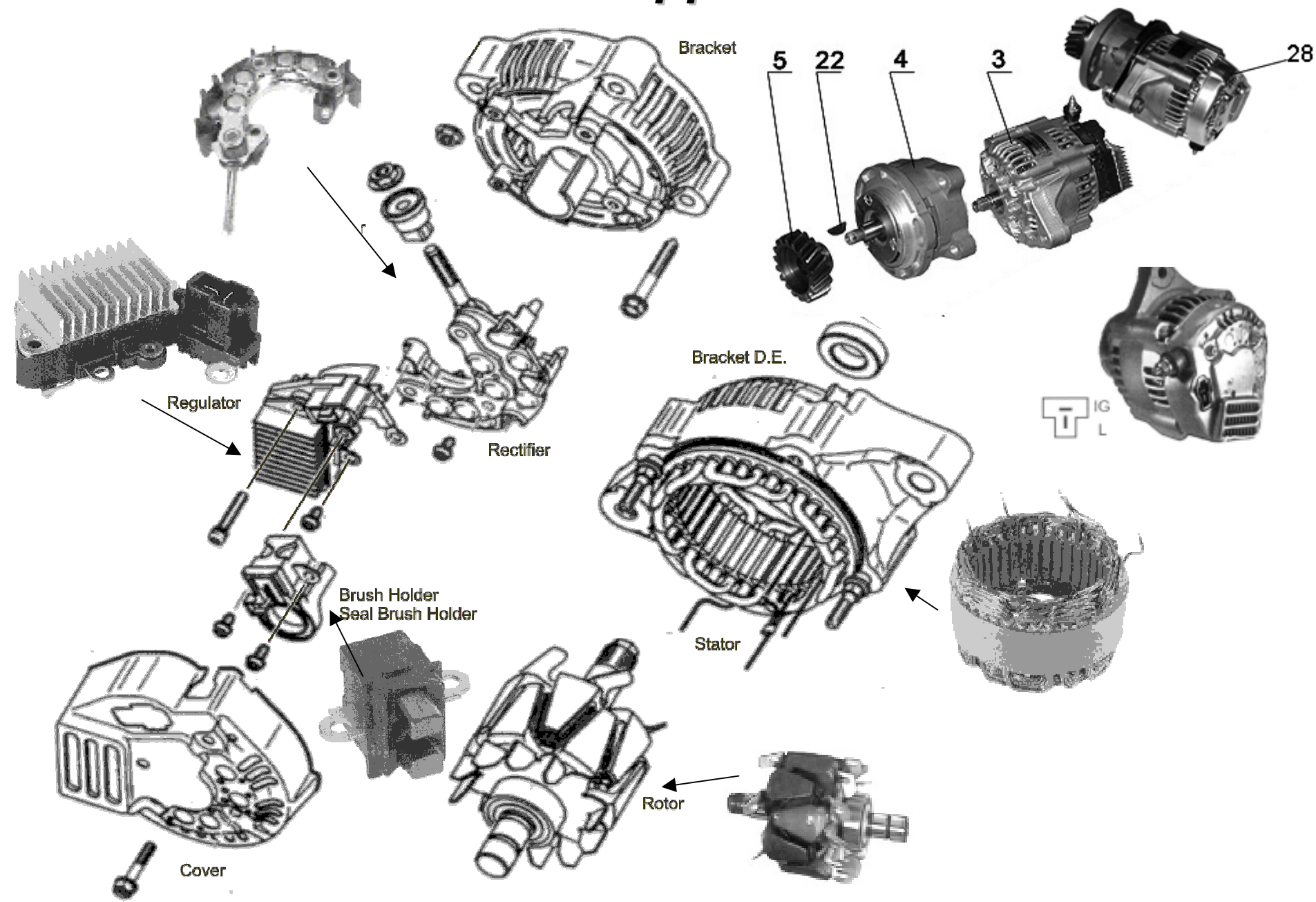

Nippon Denso Alternator Wiring

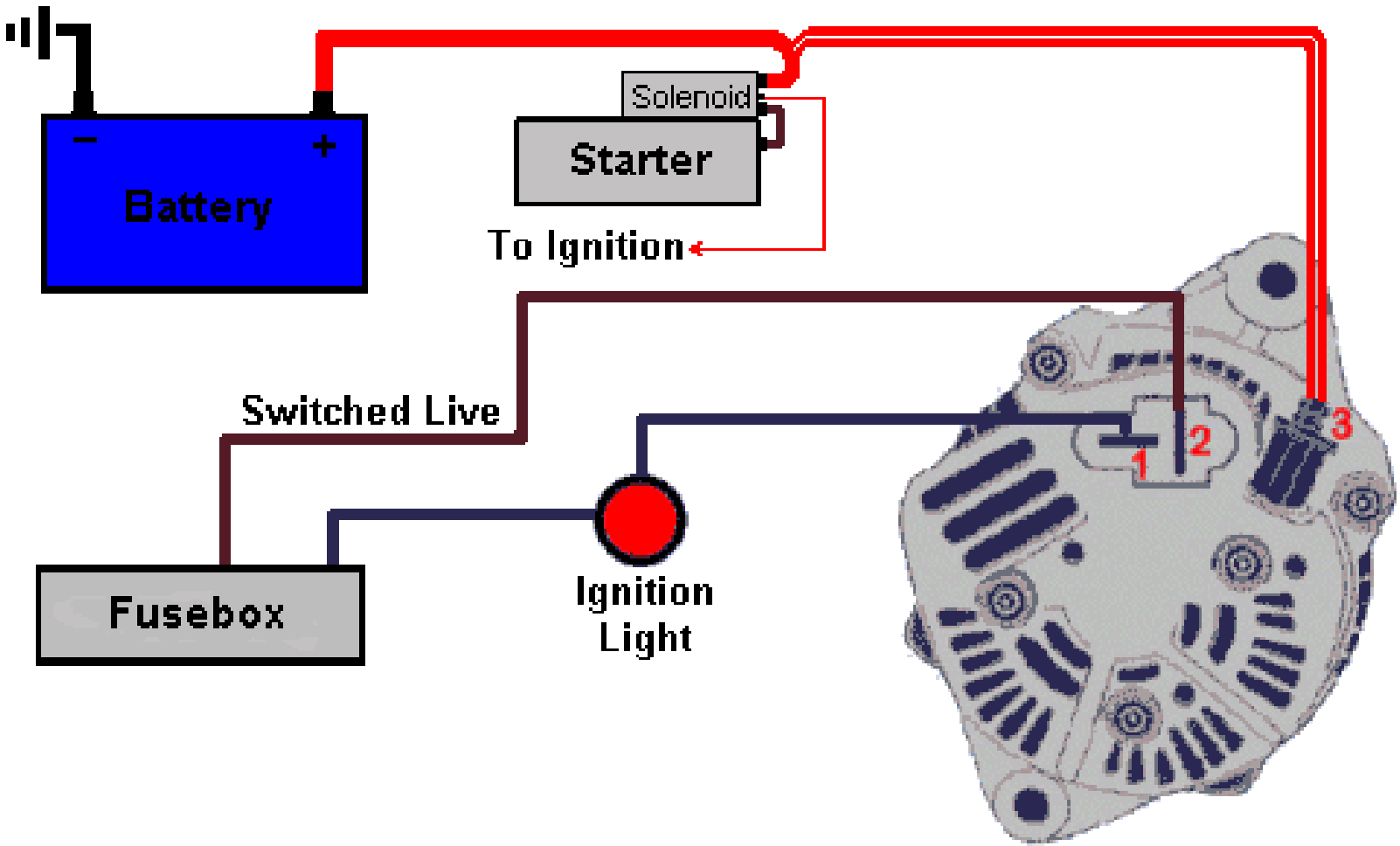

2006 Ural Patrol (USA)
27 August 2006
Carl Allison
Drawing is sized to print as super A3 (13"x19") at 50%

Ural (Урал) 2006

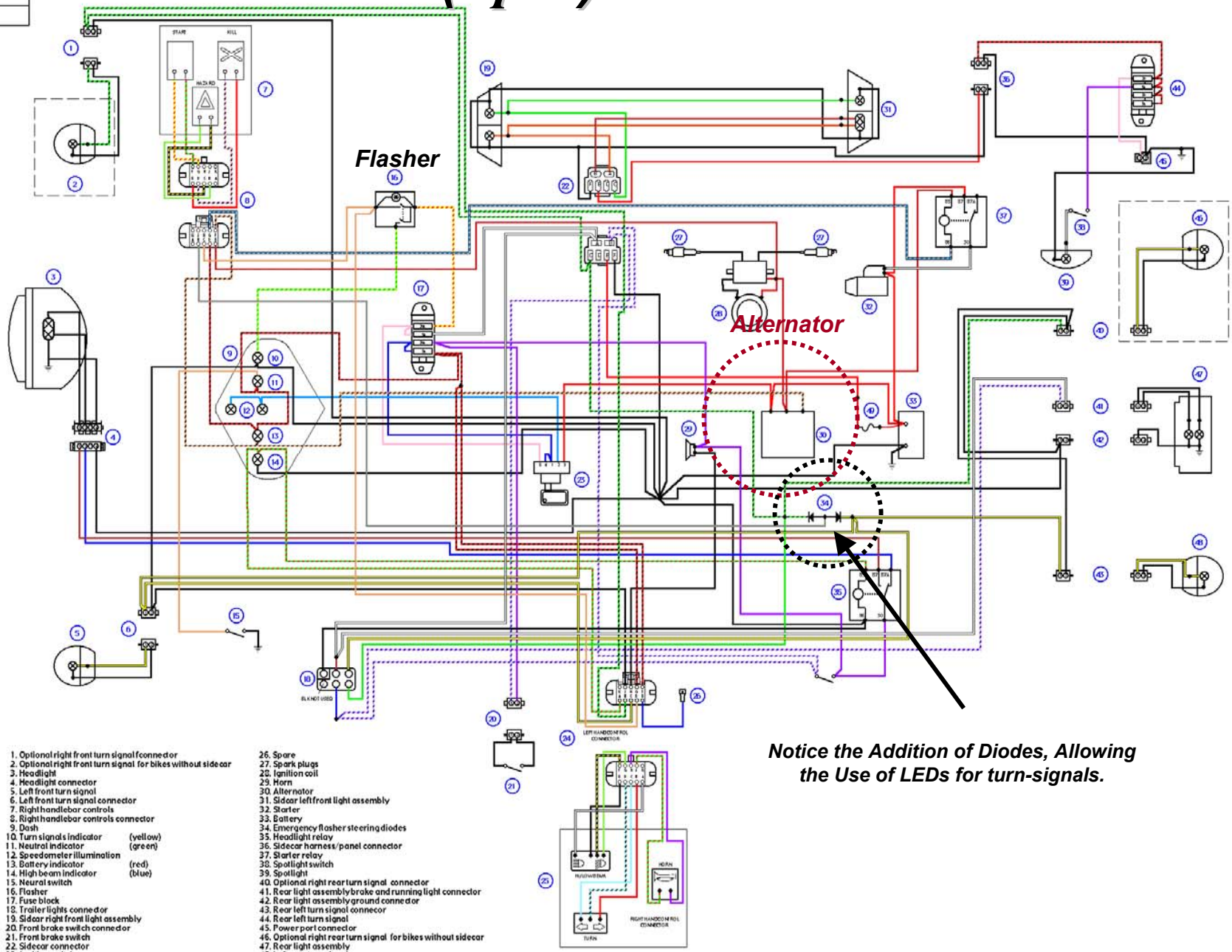

1. Optional right front turn signal fconnector
2. Optional right front turn signal for bikes without sidecar
3. Headlight
4. Headlight connector
5. Left front turn signal
6. Left front turn signal connector
7. Right handlebar controls
8. Right handlebar controls connector
9. Dash
10. Turn signals indicator (yellow)
11. Neutral indicator (green)
12. Speedometer illumination
13. Battery indicator (red)
14. High beam indicator (blue)
15. Neural switch
16. Flasher
17. Fuse block
18. Trailer lights connector
19. Sidcar right front light assembly
20. Front brake switch connector
21. Front brake switch
22. Sidecar connector
23. Ignition switch
24. Left handelbar controls conntor
25. Left handelbar controls
26. Spare
27. Spark plugs
28. Ignition coil
29. Horn
30. Alternator
31. Sidcar left front light assembly
32. Starter
33. Battery
34. Emergency flasher steering diodes
35. Headlight relay
36. Sidecar harness/panel connector
37. Starter relay
38. Spotlight switch
39. Spotlight
40. Optional right rear turn signal connector
41. Rear light assembly brake and running light connector
42. Rear light assembly ground connector
43. Rear left turn signal connecor
44. Rear left turn signal
45. Power port connector
46. Optional right rear turn signal for bikes without sidecar
47. Rear light assembly
48. Left rear turn signal
49. 20 Amp fuse

Notice the Addition of Diodes, Allowing the Use of LEDs for turn-signals.
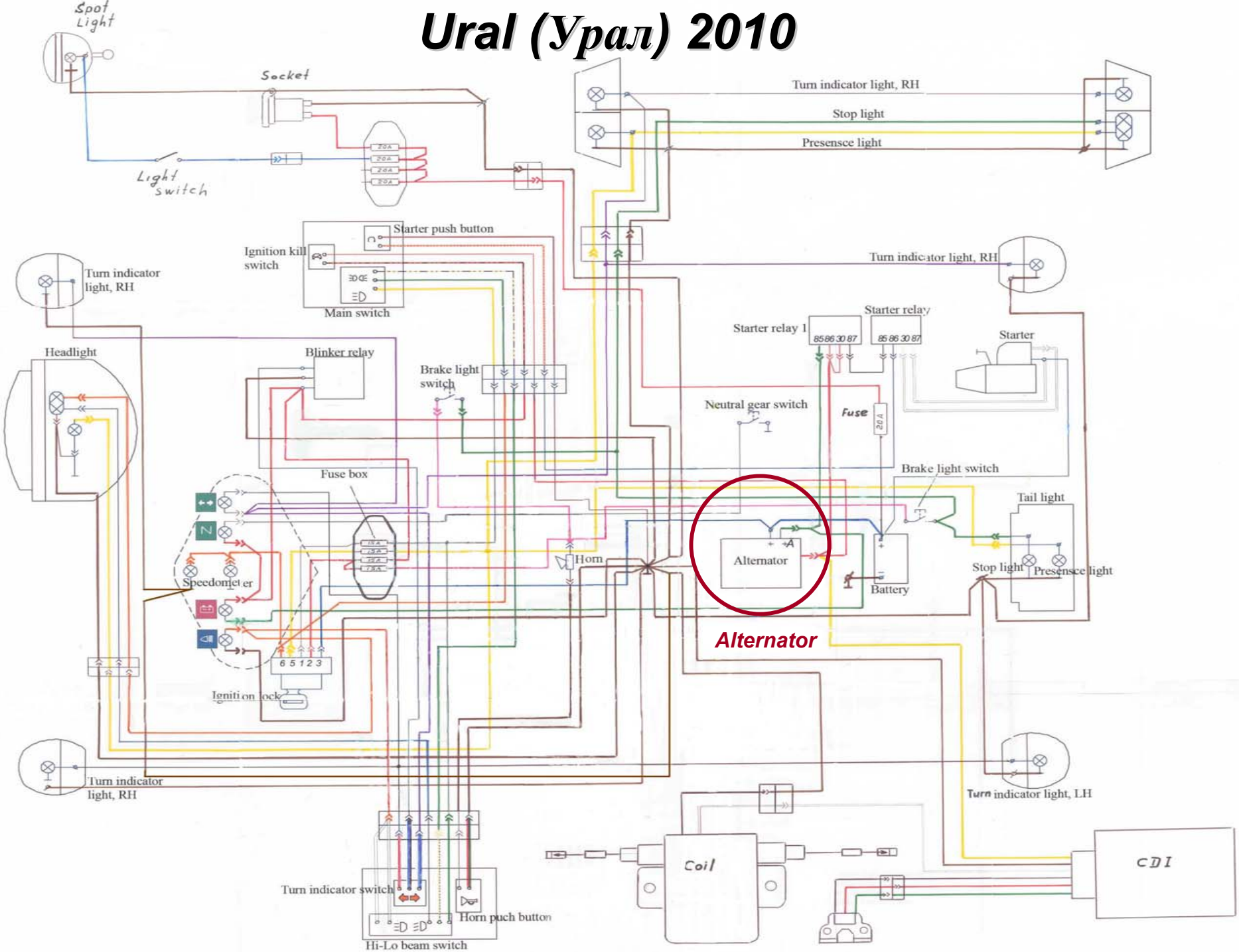
Ural (Урал) 2010