URAL® OWNER'S MANUAL

Use the table of contents to the left to navigate that manual.

URAL® MOTORCYCLES 1998 Models

IMZ-8.103-10 - Deco Classic, Italia

IMZ-8.103-40 - Tourist

IMZ-8.107 - Sportsman

IMZ-8.123 - Solo

IMZ-8.503 - Utility

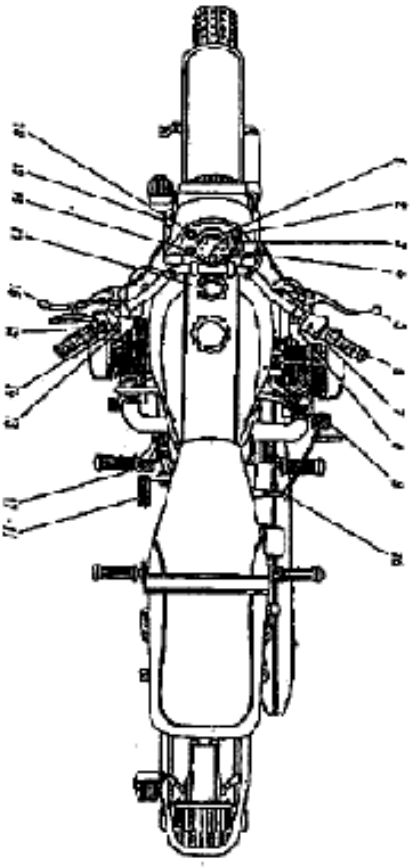

Introduction

Welcome to the URAL Motorcycling Family! Your new URAL motorcycle conforms to all applicable US Federal Motor Vehicle Safety Standards and US Environmental Protection Agency regulations effective on the date of manufacture. This manual covers the Solo motorcycle, IMZ-8.123, the motorcycle with sidecar accessory, IMZ-8.103-40 (Tourist) and IMZ-8.103-10 (Deco Classic and Italia Classic "Cruiser"s) and the motorcycle with a driven sidecar wheel, IMZ-8.107 (Sportsman). Whenever reference is made to the motorcycle with the sidecar accessory, for brevity it is referred to as the "sidecar motorcycle."

This manual has been prepared to acquaint you with the operation, care and maintenance of your motorcycle, and to provide you with important safety information. Follow these instructions carefully for maximum motorcycle performance and for your personal motorcycling safety and pleasure. Please pay particular attention to the section "Learning to Ride the URAL Motorcycle with Sidecar Accessory" and the separate manual "Driving the URAL Sidecar Motorcycle." It is critical that a beginning sidecar driver becomes thoroughly familiar with the special operating characteristics of sidecar outfits before venturing out on the roads.

Your Owner's Manual contains instructions for operation, maintenance and minor repairs. Major repairs require the attention of a skilled mechanic and the use of special tools and equipment. Your Authorized URAL Dealer and URAL certified Service Center has the facilities, experience and genuine URAL parts necessary to properly render this valuable service.

The URAL represents an important piece of German and Russian history since it has been continually manufactured with the same general arrangement and outward appearance for the past 59 years after Russian engineers initially copied the BMW's of 1939. It truly is an "instant antique" as many of our owners have said.

Since the URAL weighs 700 lb. empty with the attached sidecar, has a large frontal area and is powered by an old fashioned 649cc engine, it is not a speed demon. The URAL Rugged Classics' top speed is 65 mph and the Cruiser Classics' is 74 mph with cruising speeds of 55 & 65 mph respectively BUT only after faithful adherence to the break-in period detailed on page 16 of this manual.

If you are a vintage enthusiast, collector, local commuter, hunter, fisherman, have children, grandchildren or dog that likes to ride, or

you just like to putt around on a rig that draws an instant crowd wherever you park, welcome aboard!

The classic boxer twin has a German heritage. So effective, simple and powerful is this design that Porsche, Volkswagen, and even Harley (during the war with the XA model) made this design their choice. The reliability and torque of this elegant motor is due to its original design in 1912 by Max Friz, a brilliant German aircraft-engine builder. He devised a compact and rugged engine that delivered significant torque for its displacement, at low and constant rpms, without the gyro effects of other twins. The military and civilian uses became legendary. The German motorbike builder BMW, began using the design in their motorcycles in 1922.

Because of its opposed cylinder layout the "Boxer" as it was dubbed, turns the crankshaft in line with the motorcycle (or airplane!). This allows for a straight-through shaft connection from the engine, through the gearbox and through a stainless steel driveshaft to a rear wheel final drive gear in the wheel hub. This drivetrain design is exactly like the millions of rear wheel drive automobiles built over the past eighty years! It is a time tested, proven drive system made elegantly simple by the "Boxer" opposed cylinder engine.

Today the "Boxer" engine has evolved into the high tech and electronically sophisticated and complicated versions that can be found not only in BMWs but also in Porsches, Hondas and others. These are wondrous engines at wondrous prices! But they still retain the basic "soul" of Max Friz's first engines. And although it is not as evolved as the most modern "boxers", the IMZ650 cc is true to the earlier versions in looks, but also has many modern internal components. These parts, like pistons, rings, valves, valve guides & seats and oil seals are modern and western made. The carburetors are made in Japan. These parts make the engine more reliable and cleaner.

However, the "boxer" is still an air/oil cooled power plant. As such it must be carefully monitored during operation to prevent overheating. As the gear making and other machine tools in the IMZ plant are "vintage" ones, a careful break-in of the engine is very important. Neglecting to follow the prescribed speeds during break-in or the frequent oil changes will cause this wonderful engine to rebel against its "abusing" owner. However, by treating the "boxer" with respect and raising it well, you will be rewarded!

So its true that sometimes simple is better, and old fashioned ideas and designs have strong reasons for the ability to continue for a long time. It is the main reason why over 3.2 million URALs have been sold around the world.

In certain sections of this manual you will find references to more frequent maintenance intervals than the "light duty" minimal maintenance intervals referred to in the Maintenance Schedule Summary. Operation with the sidecar accessory attached requires adherence to the "normal duty" maintenance schedule which is

the schedule generally referred to throughout the manual.

Finally, all new owners will receive a complementary membership in the URAL Motorcycle Owner's of America (UMOA) which is an owner's club that we have formed to facilitate communication, adventure and motorcycling experience for the new URAL owners across America.

We look forward to seeing you at a future rally or URAL Owner's Club Meeting.

Any suggestions or comments are welcome! Write to us or post an e-mail on the URAL CHAT bulletin board at www.ural.com.

URAL® OWNER'S MANUAL

Important Notice!

Statements in this manual preceded by the following words are of special importance:

WARNING: Means there is the possibility of personal injury to yourself or others.

CAUTION: Means there is the possibility of damage to the vehicle.

NOTE: Other information of particular importance has been placed in italic type.

CAUTION! During the initial 2,500 km, a fundamental bedding-in of parts for all the mechanisms of the motorcycle takes place. During this period do not overload the engine or race the motorcycle in excess of the speeds specified in the section "Running-In of New Motorcycle." Doing so will void the warranty.

Maintenance intervals recommended are based on operational experience under various climatic and road conditions. However, these intervals may be extended or reduced following repeated checks of the lubricant condition and general technical condition of the motorcycle.

Carefully study this Owner's Manual before starting the motorcycle.

Specifications and design are subject to change without notice.

Table of Figures

Figure 1
Figure 4
Figure 5
Figure 6
Figure 7
Figure 10
Figure 12
Figure 13
Figure 14
Figure 15
Figure 16
Figure 17
Figure 18
Figure 19
Figure 20
Figure 21
Figure 22
Figure 23
Figure 25
Figure 26
Figure 27
Figure 29
Figure 30
Figure 31
Figure 32
Figure 35
Figure 36
Figure 37
Figure 38

Chapter 1

Specifications

*Note: -10 Models are Deco Classics & Italias

GENERAL	TOURIST/SPORTSMAN UTILITY/* -10 Models	SOLO
Maximum speed of motorcycle	108 km/h / 65mph *119 km/h 74 mph	122km/h / 77mph
Reference fuel consumption at 85% of maximum speed	12.5 km/l / 29 mpg *14 km/l / 32.5 mpg	16.7 km/l / 39 mpg
Dry mass of motorcycle	700 lb / *680 lb.	460 lb.
Maximum load-carrying capacity	500 lb. / 485 lb./*400 lb	330 lb
Noise level	below 80db	

OVERALL DIMENSIONS OF MOTORCYCLE

	TOURIST/SPORTSMAN UTILITY/* -10 Models	SOLO
Length	2500 mm / 8 ft	2200 mm / 7 ft
Width	1700 mm / 5 ft 6 in	850 mm / 2 ft 8 in
Height	1100 mm / 3 ft 6 in	1060 mm / 3 ft 8 in
Road Clearance	125 mm / 5 in	
Seat height	840 mm / 33 in	810 mm / 32 in
Wheel base	1470 mm / 55 in	

ENGINE

Type	4 stroke, overhead valves, opposed twin-cylinder
Displacement	649 cc

Cylinder bore	78 mm / 3.07 in
Piston stroke	68 mm / 2.68 in
Compression ratio	8.5
Rated horsepower	35
Rated rotational speed	5600 RPM
Rated torque, Nm	45 Nm / 33.2 ft.-lbs.
Ignition system	Contactless with electronic ignition timing
Lubrication system	Dual system of forced lubrication and by splashing
Lubricant	SAE 20W/50 (see section "Maintenance of Motorcycle")

CARBURETOR

Carburetor type	28 mm Mikuni
Number of carburetors	2
Air cleaner	Inertial type with internal filter
Fuel	91 octane premium unleaded gasoline
PCV Valve	Internal Breather

ELECTRICAL EQUIPMENT

Ignition system	12 V
Ignition coil	B204
Spark plugs	NGK BP7HS or NDW20FP-1
Ignition timing	Automatic spark timer
Power supplies	G424 generator (14 amp/150 watt -40mdls or 35 amp/300 watt - 10 mdls and solo) Storage battery (Russian supplied with new motorcycle) Recommended replacement: Interstate #12N9-4B-1
Voltage regulator (electronic)	333702
Horn	C205B
Headlight	URAL part no. UA-TB6014-017 Sylvania Incandescent 6014, 7" round sealed beam

TRANSMISSION

Clutch	Dry double-disk clutch
Gearbox	4 speed box with reverse gear (no reverse for solo model) and gear shifting foot pedal

GEAR RATIOS	TOURIST/SPORTSMAN	SOLO* -10 Mdls
I gear	3.6	3.6
II gear	2.28	2.28
III gear	1.7	1.7
IV gear	1.3	1.3
Reverse gear	4.2	N/A on Solo 4.2 on -10 mdls
Speedometer drive ratio	0.4	0.5
Final drive	Pair of bevel gears with propeller shaft	
Final drive ratio	4.62	3.89*

***On sidecar models delivered to high altitude locations, (above 2,500 ft.) the carburetor jetting is leaner and the rear axle gear ratio is always 4.62 not 3.89. This is necessary to accommodate the reduced air pressure and engine power at higher altitudes.**

FLUID CAPACITIES	Tourist & -10 Models	Sportsman	Solo
Gasoline tank	19 L / 5 Gal	19L / 5 Gal	18.5 L / 4.9 Gal
Reserve	2L / 0.5 gal	2L / 0.5 gal	2 L- / 0.5 Gal
Engine crankcase	2 L / 2 qt. + 3.6oz.	2L / 2 qt +3.6 oz	2 L / 2 qt. + 3.6oz.
Gearbox	0.9L / 1 qt	0.9L / 1 qt	0.9L / 1 qt
Final drive	110 ml / 3.85 oz.	150 ml / 5.25 oz.	110ml / 3.85oz
Telescopic Forks	N/A on Tourist	N/A on Sportsman	135ml / 4.56 oz.
(-10 & solo models)	135ml / 4.56 oz.		
Air cleaner	50 ml / 1.75 oz	50 ml / 1.75 oz	50 ml / 1.75 oz
Shock Absorbers	105 ml / 3.55 oz.	105 ml / 3.55 oz.	105 ml / 3.55 oz.

RUNNING GEAR	Rugged (Tourist & Sportsman)	Cruiser Models
Frame	Tubular welded	
Rear wheel suspension	Swing arm with hydraulic spring shock absorbers	Sidecar: Same Solo: Lower spring rate
Front fork	Leading link for the sidecar model	Telescopic spring
Sidecar	Cushioned body (on rubber cushions) and wheel on long-lever suspension with hydraulic spring shock absorber	NA on solo
Brakes	Shoe-type with mechanical drive on front, rear and sidecar wheels, front wheel has dual cams.	
Tires	4"x19" **Rugged & Cruiser** Front & Side: 22 psi cold Rear: 36 psi cold	3.5" x 18" **Cruiser (-10)** Front & Side 25 psi cold Rear: 36 psi cold 3.5" x 18" **SOLO** Front: 25 psi cold Rear: 32 psi cold

CLEARANCES	mm	in
Valves with engine cold	0.05	0.002
Between spark plug electrodes	0.50 - 0.65	0.020 - 0.026
Between brake shoes and drum	0.3 - 0.70	0.012 - 0.028
Backlash between tooth faces of bevel gears in final drive	0.1 - 0.3	0.004
Between rotor and ignition pickup	0.3 - 0.4	.012 - .016

FREE TRAVEL/ADJUSTMENTS	mm	in
Hand brake control lever	5 - 8	0.2 - 0.3
Clutch control lever	5 - 8	0.2 - 0.3
Foot brake drive pedal	¼ of full stroke of pedal, 25 - 30	1.0 - 1.2
Toe-in throughout motorcycle center distance (exception: Sportsman 0° toe-in)	10 mm	3/8 inch
Angle of motorcycle inclination to vertical plane (camber angle of rear wheel)	1° away from sidecar	
Headlight installation (with motorcycle laden)	horizontal (high beam)	

Chapter 1 *(Specifications)*

Torque Specifications

Metric (in repair manual)	US Equivalent	Location on Bike
29 to 33 Nm	22 ft/lb to 25 ft/lb	cylinder heads
22 to 25 kgf-m	175 ft/lb to 185 ft/lb	fly wheel tightening screws
3.8 to 4.2 kgf-m	30 ft/lb to 40 ft/lb	cylinder
2.1 to 3.0 kgf-m top	14 ft/lb to 22 ft/lb	shock absorber
3.6 to 5.0 kgf-m bottom	28 ft/lb to 36 ft/lbs	shock absorber
3.0 to 3.4 kgf-m	22 ft/lb to 26 ft/lb	bearing nut
3.0 to 3-4 kgf-m	22 ft/lb to 26 ft/lbs	final drive to swing arm bolts
1.6 to 1.8 kgf-m	12 ft/lb to 14 ft/lb	oil pump bolt
.8 to 1.0 kgf-m	5 ft/lb to 8 ft/lb	engine sump
1.4 to 1.8 kgf-m	10 ft/lb to 14 ft/lb	final drive case nuts
7 to 9 kgf-m	50 ft/lb to 66 ft/lb	nut fastening the pinion bearing
2.2 to 2.8 kgf-m	16 ft/lb to 20 ft/lb	reverse gear brake lever
1.8 to 2.0 kgf-m	14 ft/lb to 16 ft/lb	generator gear nut
14 to 16.8 kgt-m	100 ft/lb to 120 ft/lb	steering stem nut

CHAPTER ONE (Specifications)

Conversions

To convert from mm to in, divide by 25.4 (there are 25.4 mm per inch).

To convert from liters to gallons, divide by 3.785 (there are 3.78 liters per gallon).

To convert from liters to quarts, multiply by 1.056 (there are 1.056 quarts per liter).

To convert from liters to pints, multiply by 2.112 (there are 2.112 pints per liter).

To convert from km to miles, multiply by .62 (there is .62 mile per km).

To convert from km/hr to mph, multiply by .62.

To convert from Newton-meter (Nm) to inch-pound, multiply by 8.86.

To convert from Newton-meter (Nm) to foot-pound, multiply by .7376.

To convert from cm^3 (cc) to pints, divide by 473 (there are 473 cc per pint).

To convert Celsius to Fahrenheit: F° = C° x 1.8 + 32.

To convert Fahrenheit to Celsius, C° = (F° - 32) divide by 1.8.

Chapter 2

Motorcycle Control & Instrumentation

Figure 1. Controls and Instrumentations

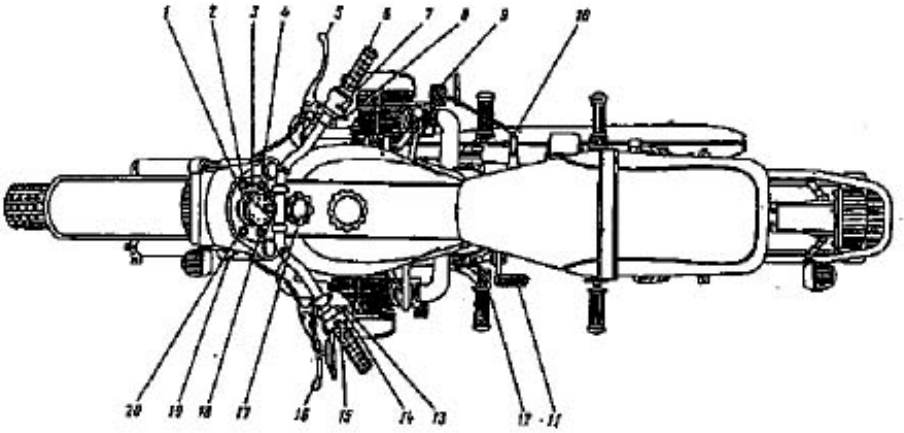

1 - Speedometer	12 - Gear shift (foot) pedal
2 - Turn indicator pilot lamp	13 - Turn indicator switch
3 - Trip odometer reset knob	14 - Horn push-button
4 - Neutral and reverse gear engagement pilot lamp	15 - "High-low" beam switch
5 - Front brake control lever	16 - Clutch control lever
6 - Carburetor throttle control twist grip bolt	17 - Steering damper tightening
7 - Ignition kill switch	18 - High-beam indicator light
8 - Electric Start Button (optional)	19 - Ignition lock
9 - Rear brake pedal & sidecar wheel brake	20 - Battery discharge warning

10 - Reverse gear lever (n/a on Solo)	21 - Master battery switch (under seat) except electric start models
11 - Kick start lever	

CONTROLS

Clutch control lever (Fig.1, #15) . When the clutch lever is squeezed, the engine is disengaged from the gearbox. When the lever is released, the engine is engaged to the gearbox.

WARNING: Make sure fingers are not positioned between hand control levers and handlebar grips or operation of vehicle could be impaired.

WARNING: Before starting engine, always shift transmission to neutral to prevent accidental movement which could cause possible damage to motorcycle and personal injury.

Front brake control lever (Fig.1, #5). When the lever is squeezed, the front wheel brake is actuated. The front brake should be used together with rear brake.

When the brake lever is squeezed, the stop signal lamps are switched on.

Kick lever (Fig.1, #10) is designed to start the engine. On pressing the lever the crankshaft of the engine is actuated through the gearbox. The lever is returned to its initial position by the spring inside the gearbox.

Gear shift foot pedal (Fig.1, #11) (also see Fig.16, #1) is a two-arm type. When the front arm is pressed, shifting from high to lower gears takes place. When the rear arm is pressed, shifting from low to higher gears takes place. Since the heel-toe shift lever is short-coupled, you will find it easier to shift up if you rotate the heel of your left foot in towards the rear arm before stepping on it with your heel. The neutral position is fixed between the I and II gears.

IMPORTANT! The green pilot lamp glows when the transmission is in neutral and when the reverse gear is engaged (see "Starting the Engine").

Reverse gear engagement lever (Fig.1, #9) (also see Fig.16, #9): Forward for neutral and/or forward running and back for reverse. **The reverse gear may be engaged only after the motorcycle is completely stopped.**

To engage the reverse gear, shift into neutral (or low), then push the reverse lever (Fig.1, #9).

To disengage the gear shift mechanism, press lever up (forward) to the limit, then the gear shift mechanism is reset to the neutral

position. Now you can shift into first gear.

If desired, neutral may be selected by shifting into reverse and back to forward again, when the first gear is engaged, and then moving the reverse gear lever forward into neutral.

The **rear brake pedal** (Fig.1, #9) applies the rear wheel and sidecar wheel brakes simultaneously.

WARNING: Do not apply either brake strongly enough to lock the wheels because this may cause possible loss of control of the motorcycle. Always use both brakes. Never stop with front or rear brake only.

WARNING: An improperly adjusted rear brake pedal could contact the exhaust system and interfere with proper rear brake operation. An improperly adjusted rear brake push rod could cause dragging brakes or interference between brake pedal and exhaust system. Either condition could cause improper rear brake operation.

Ignition lock (Fig. 1 #19) has three fixed positions of the key. 0 position - All instruments are cut off 1 position (running) - Voltage is supplied to the ignition coil, horn, voltage regulator, stop signal switches, neutral pilot lamp, turn indicator interrupter and head and tail lamps.

Note: II position is not used for US. import models due to DOT regulations.

Note: Leaving the key in the 1 or II position will discharge the battery. Always return the key to the 0 position before taking it out.

Speedometer is on the dash board, with trip and total odometer. The trip odometer is reset to zero by rotating push-button (Fig 1, #3) counter-clockwise. Note that the odometer reads in km rather than miles.

The indicator lamps are also mounted on the instrument board: (2) - turn indicator pilot lamp, orange (4) - gearbox neutral and reverse gear engagement, green (18) - head lamp high beam indicator, dark blue (20) - battery indicator lamp, red (discharging or low battery).

Note: At lower engine speeds (about 3000 RPM and/or when brakes or turn signals are employed), the battery indicator light will either be on or will flash on and off. This is normal when charging voltage is below battery voltage. If the light stays on continuously during normal operation above approximately 3000 RPM, there is a problem with the charging system or connection to the lamp.

Engine kill switch (Fig.1, #7) is on the **throttle control housing (6).** Turning the twist grip counter-clockwise increases engine speed.

The engine kill switch (Fig.1, #7) has two positions, ignition off (up),

and ignition on (down).

Low and high beam light switch (Fig.1, #17), **turn indicator switch** (Fig.1, #12) and **horn push-button** (Fig.1, #13) are combined in one unit on the left-hand handle bar control housing.

Master battery switch (Fig.1, #20) is under the seat except on electric start models where it has been eliminated.

Electric Start Button is located on the right-hand twist grip, below the kill switch.

The **steering damper** absorbs lateral kicks on the front wheel. Turning tightening bolt (Fig.1, #16) clockwise increases friction. This can be used while driving fast over bad roads.

WARNING: Do not tighten the damper to the point where the steering becomes stiff. Doing so will adversely affect handling qualities. This is particularly critical for the Solo model.

The air shutter control lever (choke) is fitted on the tube of the air control shutter at the left side of the gearbox. The lever is moved up and to the left for cold starting.

SIDE STAND (SOLO MODEL ONLY)

WARNING: Be sure the side stand is fully retracted before riding the motorcycle. If the side stand is not fully retracted during vehicle operation, it could contact the road surface with possible loss of vehicle control.

Chapter 3

Engine Operation and Maintenance

Pre-Trip Preliminaries

Before each trip, attend to all the requirements of the everyday maintenance as outlined in this manual. When priming the motorcycle with fuel and oil, take all the precautions to keep everything neat and clean.

Gasoline level in the tank fully primed should be 10 - 15 mm /½ - ¾ in. below the lower edge of the tank filler. Do not overfill the tank. See that the oil level in the engine crankcase is not higher than the top and not lower than the bottom marks on the dipstick with the filler plug undone.

CAUTION: When draining and refilling the oil tank or transmission, be careful that dirt and debris does not get into case or oil tank. Do not allow draining oil to get on rear wheel, tire, or brake components.

Chapter 3 *(Engine Operation and Maintenance)*

Starting the Engine

WARNING: Before starting the engine, make sure that the gear shift mechanism is in the neutral position (between I and II gears) to prevent accidental movement which could cause possible damage to motorcycle and personal injury. (With electric starter, clutch may be pulled in instead of shifting into neutral. For more than just starting, i.e. idling, neutral is best.)

If ignition is switched on, the green lamp on the instrument board should light up. If the motorcycle is equipped with a reverse gear gearbox, make sure that the reverse gear engagement (lever) is set to the front position. This is important since the green lamp will also be lit if the motorcycle is in reverse gear. Moving the reverse gear lever forward will put the gearbox in neutral.

Gasoline petcock positions are as follows:

* Down - ON * Horizontal - OFF * Up - RESERVE

Depending on the engine and ambient temperature, use the choke (air control shutter), carburetor enricheners and starting procedure as follows:

1. When the engine is hot, do not choke or enrichen the carburetors. To do so risks flooding the engine. Turn on the ignition and depress the kick lever (see Fig. 1) about 1/4 of its travel (enough to firmly get the ball of your foot on the lever) with either your left foot or right foot, depending on what position is most comfortable with your right hand on the throttle. Take up the slack in the throttle until you can feel some slight resistance from the return springs in the carburetors. However, do not advance the throttle, since this may flood the engine.

Note: You may find it more comfortable to stand on the left passenger foot peg with your right foot and kick with your left foot.

Give the kick lever a swift kick. If the engine starts, tickle the throttle (quickly advance and retard it) to keep the engine running, but not too fast. If the engine doesn't start, repeat the kicking procedure. A properly adjusted warm engine should start within a few kicks. If the engine doesn't start, try the choking procedure described below in item 3. If it still doesn't start or fire, it may be flooded.

Note:Do not open the throttle while kicking the engine over since it may flood the spark plugs.

To start an engine that is flooded, first open the throttle fully, hold it there and give the engine up to 10 swift kicks It should start. If it still doesn't fire, take the spark plugs out to see if they are wet with gasoline. If they are wet, dry them. Clear excess gasoline from the cylinders by kicking the engine over 10 times with the plugs out and the throttle closed. Then replace the plugs and repeat the starting procedure described at the beginning of this section (1).

For electric starter models: Set carburetor enricheners and/or air restrictor as with kick starting. Unlike manual starting, however, the gearbox does not have to be in neutral as the electric starter may be engaged with the clutch lever pulled in, or with the gearbox in neutral. Make sure the kill switch is set to "run" and push the starter button to turn over the engine. Immediately take the carburetor enricheners off when engine starts. After 2-3 minutes of running, open the air restrictor also.

2. When the engine has been standing for several hours but the ambient temperature is high (60°F/15°C degrees or above), try starting it without any choking. If it doesn't fire, use the procedure described below.

3. When the engine is cool or cold and the ambient temperature is between 40°F-60°F/5°C-15°C, depress both enricheners to start. As soon as the engine starts, immediately retract the enricheners. Run the engine at moderate speed for 30-60 seconds. If it starts to die, tickle the twist grip throttle (rapidly twist part way towards full throttle and then back off) to keep the engine running. Close the choke about ½ of its travel if needed. As soon as the engine runs smoothly without sputtering at the ½ backed-off choke position, fully open the choke and keep the engine running. If the engine sputters, put the choke back to about ½ of its travel for about 30 seconds. After 1 to 3 minutes, depending on ambient temperature, the engine should run smoothly with the choke fully open.

4. If the engine is cold and ambient temperature is below 40°F, first, give the engine 5-10 (depending on how cold it is) priming kicks with the ignition off. This will get some oil circulated to key internal parts. Depress the enricheners on both carburetors and also leave the choke fully closed. The engine should then fire within 5-10 kicks, depending on how cold it is. For example, when the ambient temperature is 0°F, it typically takes about 5-10 kicks to start the engine. As soon as the engine starts, back the choke off 1/3 of its travel and raise (retract) both enricheners (labeled "choke" in Mikuni carburetor). Then follow the running procedure described in item 3.

Note: It is very important to back off on the enricheners and choke as soon as the engine will sustain itself without sputtering. Since the URAL is an old fashioned engine design, the plugs will foul quickly (as soon as one minute) if the engine is run too rich. If one plug fouls and the other doesn't, the engine will run very unevenly

and have greatly reduced power.

WARNING: Sustained operation on only one cylinder for even just a few minutes could overheat the cylinder and cause irreversible damage to either the valves or piston. Thus it is critical to immediately shut the engine down if it appears to be running on only one cylinder.

Additional Warning: Once the engine starts, do not allow it to run at a high speed as this could cause abnormal wear of the parts and may lead to seizure of the piston pin and pistons in the cylinders since cold oil flows through the oil ducts with difficulty and fails to ensure sufficient lubrication.

A correctly adjusted warm engine should run steadily at low speed with the throttle control twist grip fully closed. Start driving the motorcycle only after having warmed up the engine, with the engine running steadily at low speed. In cold seasons do not run the engine at high RPM during initial 3 miles or drive at a speed exceeding 30 mph until the engine is fully warmed up.

Chapter 3 *(Engine Operation and Maintenance)*

Operating Precautions

WARNING: Make sure that sidecar windshield is in the full back position so it doesn't interfere with the right handlebar.

To move the motorcycle from rest, shift to the I gear only. Avoid releasing the clutch suddenly, because the engine is liable to stall or the motorcycle will start with a jerk. Do not drive the motorcycle at speeds below the recommended speeds with the II, III or IV gears engaged. It is not advisable to use the I and II gears for a long time, unless so required by road conditions.

WARNING: When shifting to lower gears with the motorcycle in motion, do not downshift at speeds higher than those listed in the table. Shifting to lower gears when speed is too high may severely damage the transmission or cause the rear wheel to lose traction.

Shift to neutral before stopping engine. Shifting mechanism can be damaged by shifting gears while engine is stopped. When engine speed decreases, as in climbing a hill or running at a reduced speed, change from a higher gear to the next lower gear while partially closing the throttle.

CAUTION: Do not run the engine at extremely high rpms with clutch disengaged or transmission in neutral. Do not idle the engine unnecessarily for more than a few minutes with motorcycle standing still.

An engine run long distances at high speed must be given closer than ordinary attention to avoid overheating and consequent damage. Have the engine checked regularly and keep it well tuned. Valve seating and good compression is particularly important. This applies particularly to a sidecar motorcycle equipped with windshields, carrying heavy loads and operating in hot weather.

WARNING: When riding on wet roads or under rainy conditions, braking efficiency is greatly reduced and caution should be used when applying the brakes, accelerating and turning. This is especially true immediately after the rain begins and the oil from the road surface combines with the water.

When descending a long, steep grade, downshift and use engine compression together with intermittent application of both brakes

to slow the motorcycle. Avoid continuous use of brakes to avoid overheating of the brakes and reduced efficiency.

To stop an overheated engine, reduce the engine speed to the minimum and completely shut the air control shutter (choke) without switching off the ignition. This will make the engine stall without any knocks or backfire. Then switch off the ignition. **Do not stop an overheated engine by switching off the ignition.** The engine jerking at low speeds results in premature wear both to the engine and the transmission.

While using the motorcycle in summer, pay special attention to the condition of the tires. Keep them inflated up to pressures specified in this manual.

Chapter 3 *(Engine Operation and Maintenance)*

Running-in the New Motorcycle

The running-in period for the motorcycle is the first 2,500 km. When running-in, keep the speeds within the limits stated in the following table.

Since the URAL engine is an old fashioned design it is critical to observe this running-in procedure. Failure to do so could result in a burned piston or valve and void the warranty.

During the running-in period, a new motorcycle requires the most careful attention. In the course of this period, do not overload the machine, avoid traveling on freeways and climbing steep upgrades. Do not race the engine or overheat it at any time.

Throttle limiters may have been installed on the motorcycle to prevent excessive rpm's during the running-in period. There is a label on the gas tank that states the running in speeds for 0 to 2500 km for the two final drive ratios used on the Ural motorcycles. Failure to observe these limits may invalidate the warranty on the engine and drive train.

Chapter 3 *(Engine Operation and Maintenance)*

Speeds Not to Exceed for Running-In

Gear	Tourist (-40) & Sportsman		Solo & Cruiser (-10)	
	0 - 2,500 km	After Run-In	**0 - 2,500 km**	After Run-In
I	**9**	12	**10**	15
II	**21**	27	**22**	31
III	**30**	39	**40**	75
IV	**42**	62	**50**	70

Pay special attention to lubrication of the engine. It is required maintenance that after the initial 500 km, the oil be drained out of the engine crankcase, flush it and fill fresh oil and oil treatment up to the correct level.

Then change oil in the gearbox and the final drive per the maintenance schedule summary.

WARNING: For your personal welfare, all the listed service and maintenance recommendations in this manual should be followed because they may affect the safe operation of your motorcycle.

Note: The performance of new motorcycle initial service is required to keep your new motorcycle warranty in force and to ensure proper emissions system operation.

WARNING: Stop the engine and support the motorcycle securely before performing all service procedures. Service should be performed in an adequately lighted and ventilated work area using the proper tools. When working on motorcycle, do not support motorcycle by placing supports under brake pedal. Damage to the brake system could occur causing possible malfunction and personal injury.

WARNING: To avoid severe engine damage, do no change carburetor synchronization, jets, or throttle linkage. Tampering with the carburetors or other critical emission elements is also a Federal Offense and may subject the

offender to civil punishment and fines. This air/oil cooled engine must always run on both cylinders as evenly as possible. Whenever one cylinder is not firing, stop the engine and determine the cause and correct it before proceeding.

Chapter 4

Brief Description of Design & Maintenance

Engine

The motorcycle is equipped with a twin-cylinder four-stroke carburetor-type air-cooled engine. Opposed arrangement of cylinders in the horizontal plane is the outstanding feature of the motorcycle design which ensures proper cooling and balancing of the crank gear. The engine valves are arranged in the cylinder heads.

In summer, carefully observe the heating condition of the engine, power transmission units and the running gear mechanisms. Under normal heating conditions of the engine, the temperature of the cylinder heads should not be over 356°F-428°F/180°C-220°C.

The **crank gear** incorporates the cylinders, the pistons with piston rings and pins, the connecting rods with bearings (Figs. 4 & 5) and the crankshaft with the flywheel.

The **engine cylinders** (Fig. 5, #8) are identical in design and interchangeable. A gasket is fitted between the cylinder and the crankcase. **When mounting the left-hand cylinder, see that the holes in the gasket are in line with those in the crankcase through which oil is fed for lubrication of the above-mentioned cylinder and oil is drained from the valve box.**

Piston, piston rings and piston pins. The engine piston has three milled grooves for fitting the piston rings. When the piston is installed into the cylinder, the clearance in the lock should be within 0.25 - 0.50 mm. The piston is coupled to the connecting rod by means of a floating piston pin with circlips.

Crankshaft and connecting rod. The engine crankshaft is made up of two crank portions arranged in one plane at 180°. It has two journals with main journals and counterweights, the cheek and two crankpins (Fig. 5, #26) which serve as connecting rod journals.

Crankcase. The crankcase accommodates the cylinders, the timing gear and auxiliary mechanisms. It also serves as an oil container. Oil Filter (Fig. 4, #22) mounted in the timing gear cover is stopped with plug (Fig. 4, #24) incorporating a bypass valve.

The engine is provided with forced ventilation of the crankcase. Breather (Fig. 4, #15) located in central opening of the timing gear cover is used for ventilation.

Figure 4. Engine (longitudinal section)

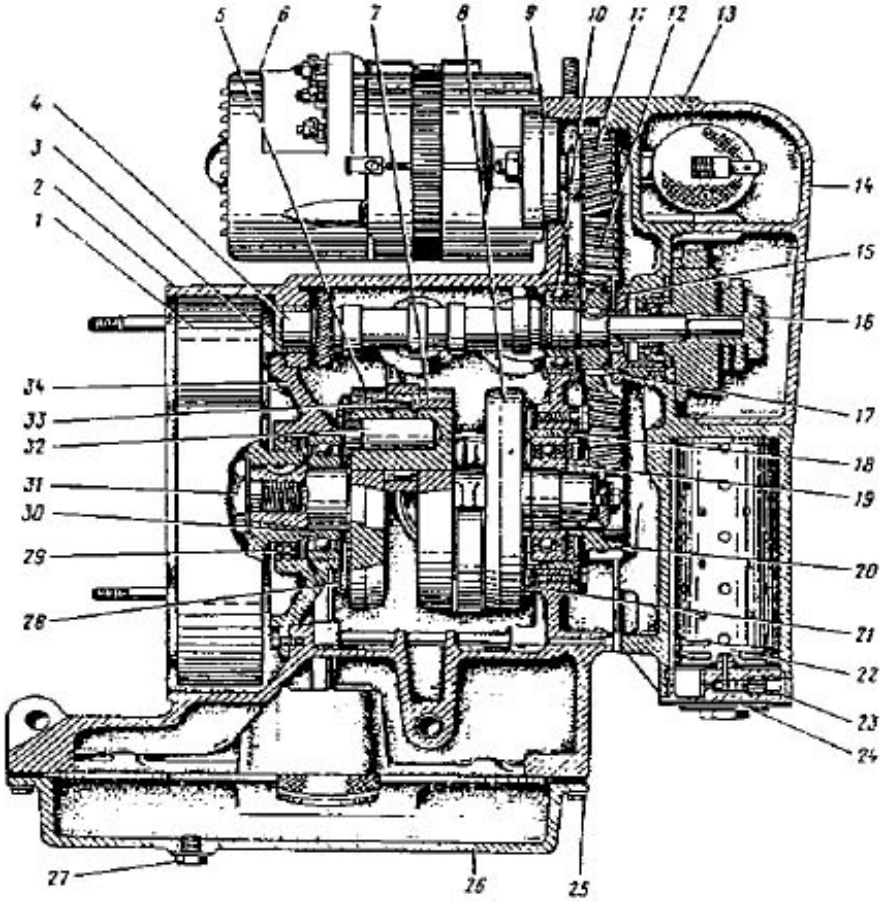

1 - Flywheel	12 - Camshaft gear	23 - Packing ring
2 - Crankcase	13 - Timing gear cover	24 - Oil filter plug
3 - Camshaft bushing	14 - Front cover of crankcase	25 - Sump bolt
4 - Camshaft	15 - Breather	26 - Sump
5 - Rear journal of crankshaft	16 - Seal	27 - Drain plug
6 - Starter/Generator	17 - Breather tenon	28 - Oil trap

7 - Crankshaft cheek	18 - Front ball bearing housing	29 - Seal
8 - Front journal of crankshaft	19 - Ball bearing	30 - Ball bearing
9 - Generator gasket	20 - Timing pinion	31 - Flywheel fastening bolt
10 - Camshaft bearing	21 - Oil trap	32 - Crank pin
11- Generator gear	22 - Oil filter	33 - Roller bearing
		34 - Rear bearing housing

Figure 5. Engine (cross section)

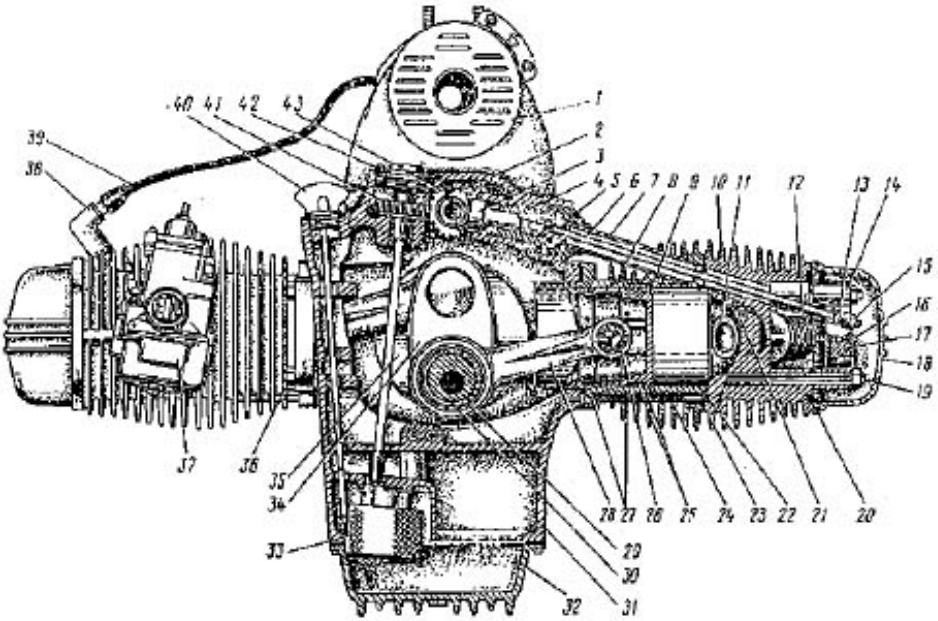

1 - Starter/Generator	15 - Adjusting bolt locknut	29 - Roller bearing
2 - Camshaft	16 - Rocking arm	30 - Crankpin
3 - Tappet	17 - Rockshaft	31 - Crankcase
4 - Tappet guide	18 - Cylinder head cap	32 - Sump
5 - Sealing cap	19 - Cylinder head stud	33 - Oil pump
6 - Push rod	20 - Gasket	34 - Crankshaft cheek
7 - Push rod tube	21 - Ignition plug	35 - Oil trap

8 - Cylinder	22 - Duct for oil out of cylinder head	36 - Cylinder fastening nut
9 - Piston	23 - Gasket	37 - Carburetor
10 - Cylinder head	24 - Oil drain tube of cylinder	38 - Spark plug tip
11 - Valve	25 - Compression rings	39 - H.V. wire
12 - Valve spring	26 - Piston pin	40 - Filler plug with dipstick
13 - Adjusting bolt	27 - Oil rings	41 - Oil pump drive gear
14 - Rockshaft bracket	28 - Connecting rod	42 - Oil pump drive plug
		43 - Oil pump drive pinion

As the pistons move up, the vent duct is overlapped, the crankcase interior is cut off from the atmosphere and vacuum is built up.

If the piston rings are in good condition, the breather maintains permanent vacuum in the crankcase, thus excluding any possibility of oil expelling though the seals. The crankcase ventilation system is routed to the air cleaner. When running the motorcycle in winter an ice plug may be formed in the tube connecting the breather with the air cleaner leading to oil leakage through sealing glands. Therefore, this tube should be inspected frequently when running in very cold conditions.

Chapter 4 *(Brief Description of Design and Maintenance)*

Valve Timing Gear

The valve timing gear (Fig. 6) controls the feed of combustion mixture into the cylinders and waste gas exhausted into the atmosphere. The intake and the exhaust valves are not interchangeable. The camshaft rests on two bearings inside the engine crankcase. The front is a ball bearing and the rear one is a bronze blind bushing.

Correct valve timing is obtained by aligning the mark grooves on the timing gears. This must be carefully observed during disassembly and reassembly of the engine.

Valve adjustment. It is very important to adjust the valves properly. Valves are adjusted to provide the correct clearance with a cold engine. The clearance should be 0.05 mm/0.002 in. In service, it will change due to bedding-in of single parts.

It is important to readjust the clearances after grinding or partial disassembly of the valve mechanism. For this purpose, put a pan under the cylinder head, take off the head cap and drain off accumulated oil. Turn the crankshaft using the kick lever. Just when the intake valve (Fig. 6, #22) begins to close, set the clearance for the exhaust valve (Fig. 6, #10) and at the time the exhaust valve begins to open, set the clearance for the intake valve. Check the clearance between the larger end of the rocker arm and the valve stem. If the clearance happens to be larger or smaller than 0.05 mm/0.002 in, slacken off locknut and by turning the adjusting bolt (Fig. 6, #19) in or out, set the required clearance with a feeler gauge. Lock the adjusting bolt with the locknut (Fig. 6, #20) and check the clearance again.

In the course of running-in, check valve clearances after 500 km and as required, but at least once every 2,500 km. Readjust clearances on the cold engine only.

Engine maintenance. During everyday preventive maintenance, clean the engine from mud and dust paying special attention to the cooling fins as their fouling will impair the condition of the engine cooling. Check engine crankcase, cylinders and cylinder heads for leaks of oil and fuel. Check the engine performance with the motorcycle running.

If oil consumption exceeds 1 pint per 500 km, replace the piston

rings.

Figure 6. Engine Valve Timing Gear

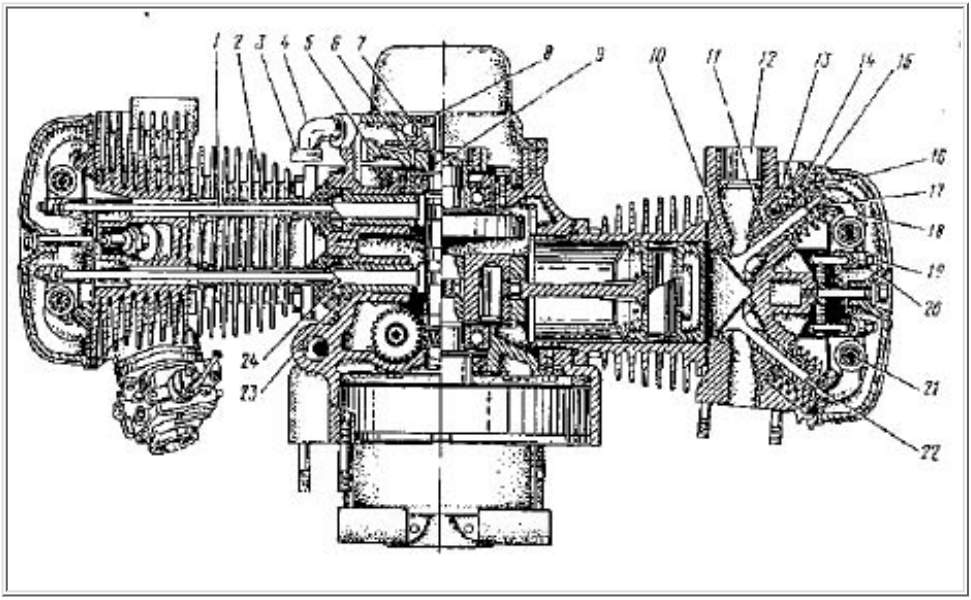

1 - Push rod	13 - Lower retainer
2 - Push rod housing	14 - Outer valve spring
3 - Hose	15 - Inner valve spring
4 - Breather pipe	16 - Upper retainer
5 - Camshaft gear	17 - Valve block
6 - Breather tenon	18 - Rocker arm
7 - Breather	19 - Adjusting bolt
8 - Seal	20 - Adjusting bolt locknut
9 - Camshaft	21 - Rockshaft
10 - Exhaust valve	22 - Intake valve
11 - Valve guide	23 - Tappet guide
12 - Exhaust branch	24 - Tappet

Completely follow all maintenance intervals specified in the Maintenance Schedule Summary and the mileage noted on the Service Coupons.

Chapter 4 *(Brief Description of Design and Maintenance)*

Lubrication System

The motorcycle engine features a dual lubrication system, some parts are force-lubricated by pressure built up by the oil pump, while others by splashing (Fig. 7). A full-flow paper oil filter is provided in the lubrication system to prolong the engine life.

The lower portion of the crankcase together with the sump are used as an oil tank for the engine. The single-section oil gear pump (Fig. 7, #24) is driven from the camshaft through the gear and connecting bar (Fig. 7, #2). Oil is primed into the engine crankcase through the hole in the left-hand side which is capped with the dipstick (Fig. 7, #23).

Maintenance of lubrication system. During the daily inspection, check the oil level in the engine crankcase and top off oil, if necessary.

The oil dipstick has two grooves showing the lower and the upper oil level limits. In checking the oil level, wipe the dipstick and insert it into the crankcase without screwing in the dipstick. Change oil in the engine crankcase for the first time after 500 km, then as outlined in the Maintenance Schedule Summary.

Before changing the filter, wash the engine lubrication system. To this end, fill the crankcase with at least 1 lt. / 1 qt. of fresh oil.

Warm up the engine before changing oil. Drain used oil from the crankcase and the oil filter cavity having unscrewed drain plug (Fig. 4, #27) and filter plug (Fig. 4, #24). Change oil filter at the intervals shown in the Maintenance Schedule Summary. Submerge the filter in oil prepared for priming the engine, set the rubber sealing bushing into the filter and fit the filter with the bushing onto the adapter of plug (Fig. 4, #24), then screw the latter into the front cover. Now screw in plug (Fig. 4, #24). Fill engine crankcase with 55.6 oz oil, 12 oz. Ural Oil Treatment.

Let the engine run for 3 - 5 min. Check the oil level again adding oil up to the top groove of the dipstick. Oil is checked with the dipstick resting on the engine but not screwed in.

Figure 7. Engine Lubrication System

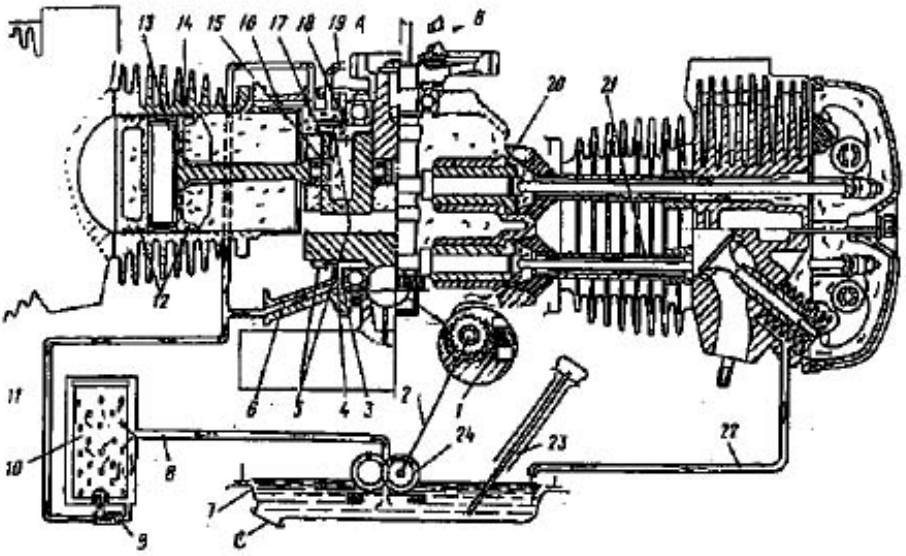

1 - Duct for oil flow to rear bearing	15 - Holes in crank pin for lubrication of connecting rod big end bearing
2 - Connecting bar and oil pump drive gear	16 - Oil supply duct to left-hand cylinder
3 - Duct in rear bearing housing for oil flow	17 - Inner cavity of crank pin
4 - Calibrated hole for oil flow	18 - Oil duct for lubrication of friction parts in cylinder head
5 - Crank shaft oil traps	19 - Tube for lubrication of timing gears
6 - Vertical duct for oil flow into rear bearing housing	20 - Oil duct for lubrication of friction parts in cylinder head
7 - Crankcase sump	21 - Inner cavity of push rod tube for oil flow
8 - Oil duct to oil filter	22 - Oil drain duct out of cylinder head
9 - By-pass valve	23 - Filler plug with dipstick
10 - Oil filter	24 - Oil pump gear
11 - Main Oil Line	A - Lubrication of valve timing gears
12 - Piston oil rings	

13 - Holes in connecting rod small end for lubrication of piston pin	B - Gas escape out of engine crankcase
14 - Holes in piston bosses for lubrication of piston pin	C - Oil drain out of crankcase sump

Chapter 4 *(Brief Description of Design and Maintenance)*

Lubrication System

The motorcycle engine features a dual lubrication system, some parts are force-lubricated by pressure built up by the oil pump, while others by splashing (Fig. 7). A full-flow paper oil filter is provided in the lubrication system to prolong the engine life.

The lower portion of the crankcase together with the sump are used as an oil tank for the engine. The single-section oil gear pump (Fig. 7, #24) is driven from the camshaft through the gear and connecting bar (Fig. 7, #2). Oil is primed into the engine crankcase through the hole in the left-hand side which is capped with the dipstick (Fig. 7, #23).

Maintenance of lubrication system. During the daily inspection, check the oil level in the engine crankcase and top off oil, if necessary.

The oil dipstick has two grooves showing the lower and the upper oil level limits. In checking the oil level, wipe the dipstick and insert it into the crankcase without screwing in the dipstick. Change oil in the engine crankcase for the first time after 500 km, then as outlined in the Maintenance Schedule Summary.

Before changing the filter, wash the engine lubrication system. To this end, fill the crankcase with at least 1 lt. / 1 qt. of fresh oil.

Warm up the engine before changing oil. Drain used oil from the crankcase and the oil filter cavity having unscrewed drain plug (Fig. 4, #27) and filter plug (Fig. 4, #24). Change oil filter at the intervals shown in the Maintenance Schedule Summary. Submerge the filter in oil prepared for priming the engine, set the rubber sealing bushing into the filter and fit the filter with the bushing onto the adapter of plug (Fig. 4, #24), then screw the latter into the front cover. Now screw in plug (Fig. 4, #24). Fill engine crankcase with 55.6 oz oil, 12 oz. Ural Oil Treatment.

Let the engine run for 3 - 5 min. Check the oil level again adding oil up to the top groove of the dipstick. Oil is checked with the dipstick resting on the engine but not screwed in.

Start the engine and let it idle for 2 - 3 min, drain oil from the sump, the head covers and the oil filter cavity.

Important! The bypass valve has been accurately adjusted to pressure the oil mains, therefore, do not attempt to dismantle the valve. While screwing in the filter plug, be careful so as not to damage the rubber gasket.

During motorcycle service, keep oil level in the engine crankcase close to the top groove of the oil dipstick.

Stop the motorcycle as soon as oil level drops down to the lower mark groove of the dipstick.

Chapter 4 *(Brief Description of Design and Maintenance)*

Ignition System

The ignition system incorporates the power supplies, ignition coil, moving coil pickup, electronic commutator, two spark plugs, a set of low and high voltage wires and the ignition switch.

A contactless ignition system with electronic ignition timing is employed.

For the electric circuit diagram of the motorcycle with contactless ignition system refer to Fig. 32.

The system consists of moving coil pickup and the electronic commutator module.

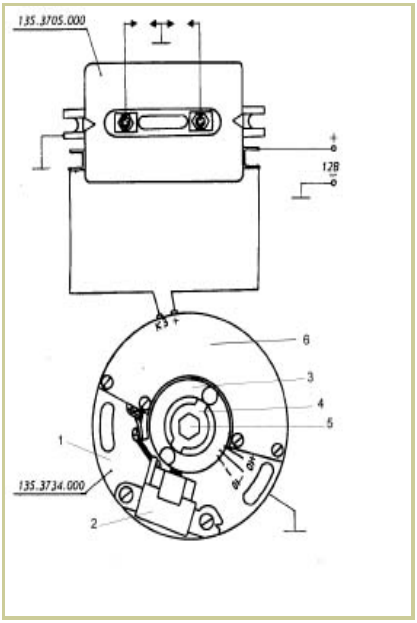

Ignition coil. The ignition coil has two high voltage terminals, each supplying one of the cylinder spark plugs and operating in conjunction with the moving coil pickup.

Figure 12. Moving Coil Ignition Pickup

1 - pickup base	4 - rotor carrier
2 - pickup	5 - bolt
3 - pickup rotor	6 - electronic commutator

Periodically, check all wires to be sure they aren't crimped or have loose connections.

Ignition Timing. When checking the ignition setting at the time of service, please have the URAL idling (800 rpm) and use a stroboscope (timing light). This way a more precise adjustment can be achieved than when using marks on the rotor and pickup base as guidance. Usually, your stroboscope setting will match the existing marks, but sometimes it will be a couple

degrees off. For future service you might want to put a small paint dot on the pickup base indicating the most accurate ignition timing mark (it will overrule the existing "0" mark on the pickup base, so the rotor will have to match the new paint mark for the correct ignition setting).

Note: The wrong ignition timing may seriously damage the engine. It is easy to determine if ignition timing has been set incorrectly. This may result in a denial of a warranty claim by URAL® America, Inc.

Spark plugs. In certain situations, spark plugs can quickly foul with carbon or soot. The plugs can be cleaned but it is easier to put in a new set of plugs when on the road. We recommend that you purchase an extra set of these plugs from your Authorized URAL Dealer and carry them in the motorcycle at all times.

The lower portion of the plug shell is threaded M14 X 1.25 with an 11 mm length of thread. Spark gap of 0.5-0.65 mm/0.020"-0.026" is set between the side electrode and the bottom end of the central electrode. Always use a crush washer when installing a spark plug, preferably a new crush washer.

WARNING: Do not over tighten the spark plug when mounting it on the engine, since this could damage the cylinder head.

Functioning of ignition system. Both plugs fire simultaneously on the left and right-hand cylinders, one spark being formed when the compression stroke terminates in one of the cylinders and the other during the exhaust stroke.

Carburetors

28 mm Mikuni VM-type carburetors are used on US import versions of the URAL motorcycle for compliance with US EPA requirements.

The following sections have been extracted from the Mikuni manual "Tuning Mikuni Carburetors VM & TM". These sections should provide the owner and/or URAL mechanic with sufficient understanding of the Mikuni carburetors to properly adjust the carburetors to factory settings.

WARNING: To avoid severe engine damage, do no change carburetor synchronization, jets, or throttle linkage. Tampering with the carburetors or other critical emission elements is also a Federal Offense and may subject the offender to civil punishment and fines. This air/oil cooled engine must always

run on both cylinders as evenly as possible. Whenever one cylinder is not firing, stop the engine and determine the cause and correct it before proceeding.

Chapter 5

Tuning Mikuni Carburetors VM & TM

1 - Throttle cable rubber cap
2 - Cable adjuster
3 - Cable adjuster locknut
4 - Mixing chamber top
5 - Mixing chamber top gasket
6 - Throttle valve spring
7 - Spring seat plate
8 - Needle positioning clip
9 - Needle
10 - Throttle valve
11 - Needle jet
12 - Starter plunger rubber cap
13 - Starter plunger fitting
14 - Starter lever
15 - Starter lever spring plate
16 - Starter plunger spring
17 - Starter plunger
18 - Mixing chamber body
19 - Float bowl gasket
20 - Float bowl baffle plate
21 - Pilot jet
22 - Float arm hinge pin
23 - Float arm
24 - Float
25 - Float bowl
26 - Main jet plug washer
27 - Main jet plug
28 - Air jet
29 - Air adjusting screw
30 - Air adjusting screw spring
31 - Idle adjusting screw

spring
32 - Idle adjusting screw
33 - Needle valve washer
34 - Needle valve
35 - Main jet ring
35a - Washer
36 - Main jet
37 - Vent tube anchor plate
38 - Float bowl screw
39 - Guide screw
40 - Needle jet setter
41 - Needle jet setter 0-ring
42 - Washer, banjo bolt
43 - Banjo bolt
44 - Rubber flange adapter

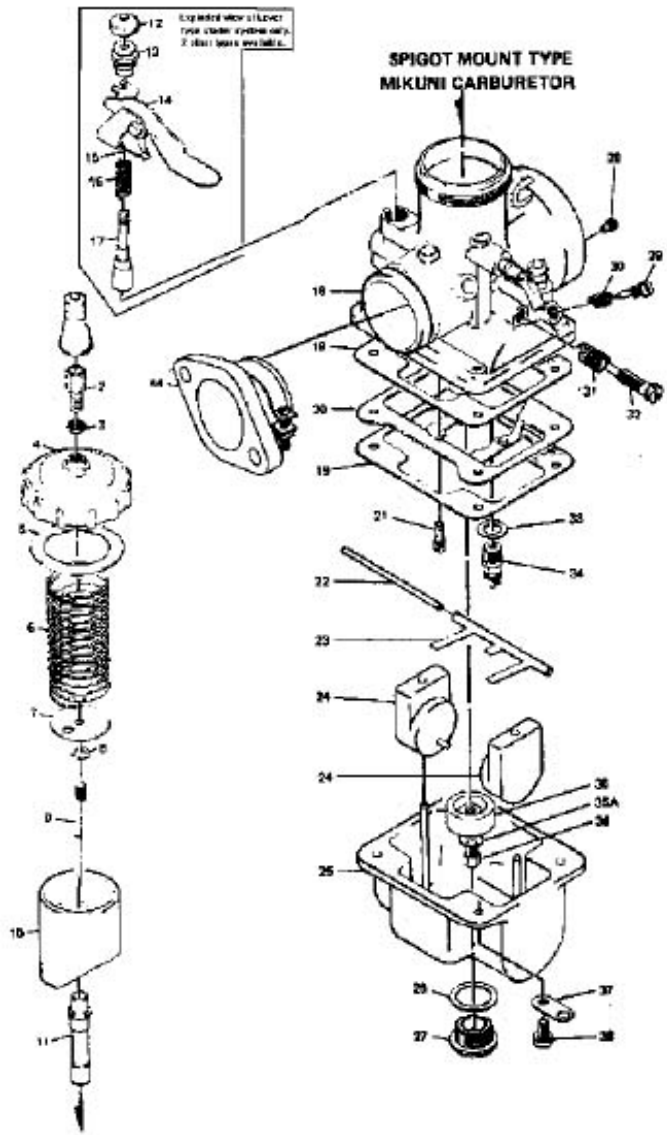

This manual is intended as a guide for users of Mikuni carburetors who want to learn the basic methods of tuning and adjusting to obtain top performance and fuel economy. The arrows that appear in the drawings in this text show the direction in which air, fuel and air-fuel mixture flows.

Information herewith obtained from Mikuni engineering data and manuals.

1. CARBURETOR FUNCTION

The function of a carburetor is to deliver a combustible air-fuel mixture to the engine.

However, in order to be effective, it must first break the fuel into tiny particles (in the form of vapor) and then mix the fuel with air in a proper ratio so it can burn without leaving excess fuel or air.

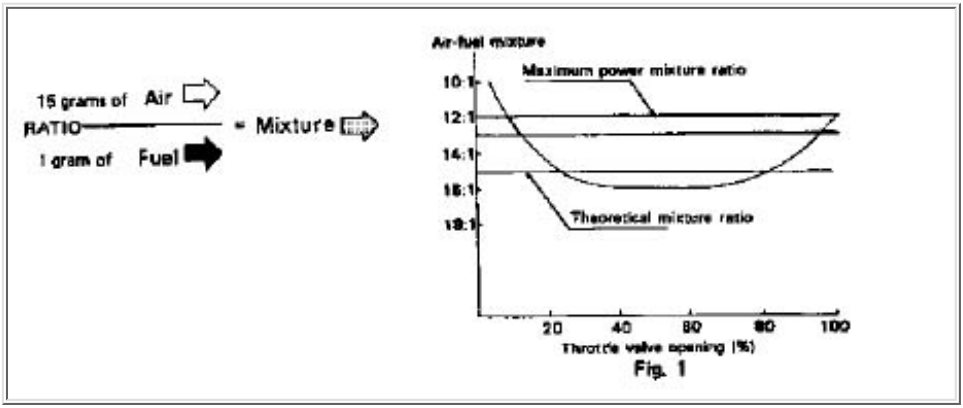

Fig. 1

2. AIR FUEL MIXTURE (Fig. 1)

The mixture of the air-fuel ratio is generally expressed by its relative weight proportion. For example, the amount of air required for complete combustion of 1 gram of fuel under normal conditions is:

In reality, varying mixture ratios are required for the engine depending on operating conditions. Although the required mixture rate varies more or less with the type of engine, its cooling efficiency, etc., the mixture ratio shown in Fig. 1 is required for ordinary engines. In the high speed range the ratio of about 12 to 13 grams of air for 1 gram of fuel produces the maximum output. However, in the case of an engine with low cooling efficiency, a somewhat richer mixture (10 to 12 grams of air against 1 gram of fuel) may be required to prevent seizure of the engine.

3. FUNCTION AND CONSTRUCTION

Mikuni VM-Type Carburetors

Motorcycle engines are operated under a wide range of conditions, from idling with the throttle valve (Fig. 2 (1)) remaining almost closed, to the full load (the maximum output) with the throttle valve fully opened. In order to meet the requirements for the proper mixture ratio under these conditions, a low-speed fuel system (the pilot system) and a main fuel system (the main system) are provided in Mikuni VM-type carburetors.

A - The Pilot System

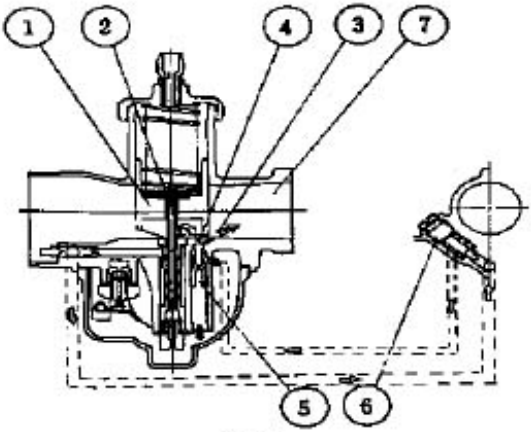

Fig. 2

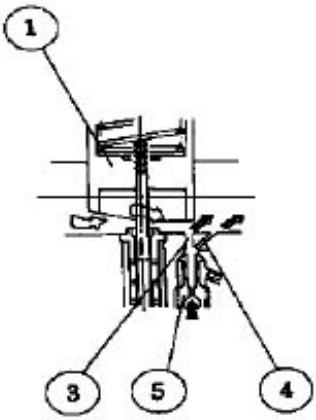

Fig. 3

Low-speed fuel system (Fig. 2 and Fig. 3)

Since the engine is operated with the throttle valve almost closed at idling or in the low speed range, the velocity of air flowing through the needle jet (2) is slow. Consequently, a vacuum strong enough to draw fuel from the needle jet in the main fuel system is not created. The fuel supply during this low speed operation is controlled by means of the pilot outlet (3) and the bypass (4) that are situated near the intake port. At idle, when the throttle valve is slightly opened, fuel metered by the pilot jet (5) is mixed with air adjusted in a proper amount by the air screw (6) and is broken into fine particle (vapor).

The mixture is again mixed with fuel coming from the bypass and is drawn into the pilot outlet to mix with air flowing through the main bore (7). The fuel mixed at this stage then goes into the engine. When the throttle valve is opened slightly during low speed operation, the pilot outlet alone cannot supply the required fuel and the shortage has to be made up with fuel injected from the bypass. the adjustment of the mixture ratio during this stage is made by the pilot jet and the air screw, in the case of a two-hole type fuel system (Fig. 3). While at low speed operation if full throttle is initiated a similar shortage of fuel exists and during this transition from low to medium or low to high the fuel again has to be injected from the bypass until enough (vacuum) can be created to draw fuel from the main fuel system.

B - Main Fuel System

On Mikuni VM-type carburetors, the pilot system and the main system are of independent construction.

The fuel flow in these two systems is shown in Fig. 5.

C - Float System (Fig. 8)

The float system serves to maintain a constant level of fuel in the bowl. Fuel flows through the needle valve (14) and enters the float chamber (15). As the fuel enters the float chamber, the float (16) moves upward to its pre-determined level because of buoyancy. When the fuel reached the pre-determined level, the needle valve begins to close due to the lever action of the float arm rising as the float attains buoyancy, thus shutting off the supply of fuel.

The fuel lever in the bowl controls the amount of fuel which is metered to make the optimum fuel mixture. For example, too high a level allows more fuel than necessary to leave the needle jet enriching the mixture. Too low a level results in a leaner mixture, as not enough fuel leaves the needle jet. Therefore, the pre-determined fuel level should not be changed arbitrarily.

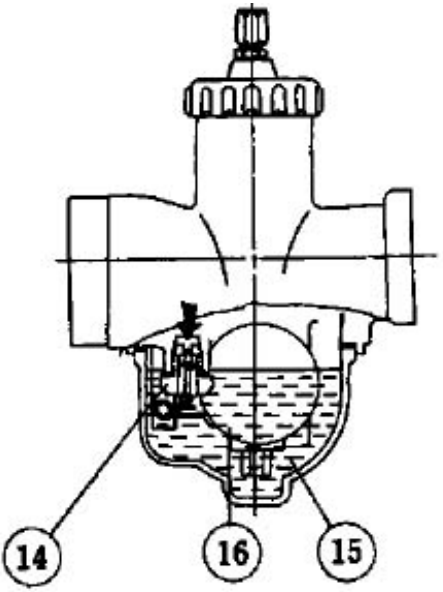

Fig. 8

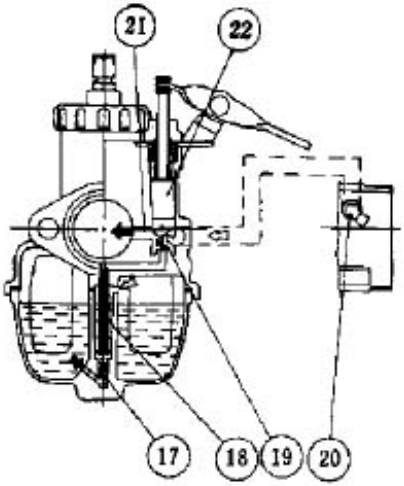

Fig. 9

Enrichment System (Fig. 9)

In place of the choke the enrichment system is employed for Mikuni carburetors. Fuel and air for starting the engine are metered by entirely independent jets. the fuel metered by the starter jet (17) is mixed with air and is broken into tiny particles in the emulsion tube (18). The mixture ten flows into the plunger area (19), mixes again with air coming from the air intake port for starting and is delivered to the engine in the optimum air-fuel ratio through the fuel discharge passage (21). The enrichment valve is opened and closed by means of the starter plunger (22). Since the enrichment type is constructed so as to utilize the vacuum of the inlet passage (20), it is important that the throttle valve is closed, when starting the engine. At temperatures above 60°F, the enrichment lever.

6. MAINTENANCE

A carburetor consists of various precision-machined parts such as jets, needles, valves, etc. Therefore, care should be exercised, when removing jets or disassembling the carburetor for cleaning.

1. Proper tools should be used for disassembling and reassembling of jets. Handle each part carefully to avoid scratches, bending, etc. Wash the jets and the carburetor properly in solvent and blow them out with compressed air. For carburetors whose main jet can be replaced from the outside, an "O" ring is used to prevent leakage of fuel. When you fit the "O" ring, apply a little lubricator fuel to the "O" ring. It is important to maintain the fuel level in the carburetor. Do not touch the float arm when disassembling the carburetor. If the float arm is bent accidentally, adjust the height of rib to the specified measurement (refer to Fig.. 18).

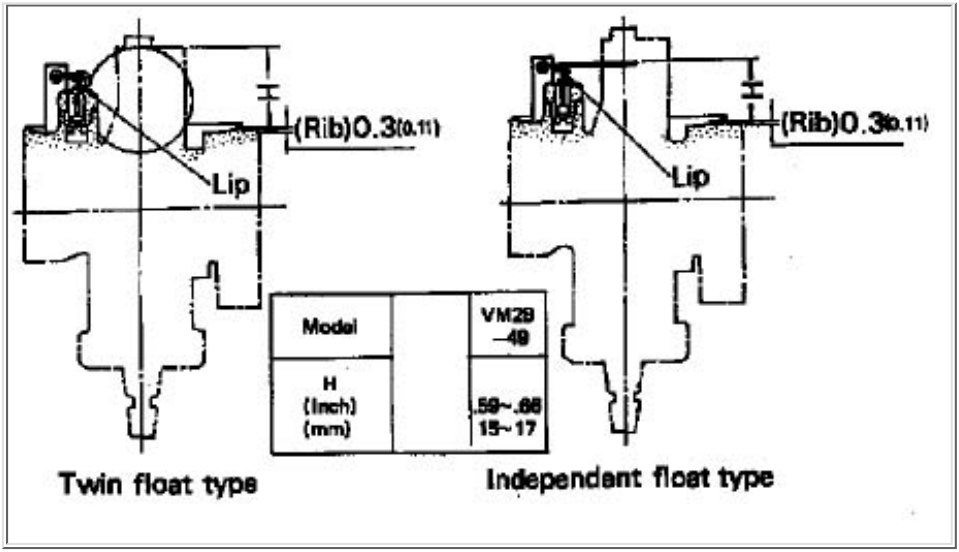

8 - ENGINE TROUBLE SHOOTING

When the carburetor setting is not correct or out of tune various irregularities in engine performance are noticeable. These irregularities can be traced to two basic causes:

When air-fuel mixture is too rich:
a) The engine noise is dull and intermittent.
b) Engine performance grows worse when the enrichment valve is opened.
c) Engine performance grows worse when it gets hot.
d) Removal of the air cleaner improves engine performance somewhat.
e) The exhaust gases are heavy.
f) The spark plug is fouled (black wet deposit around electrode). When air-fuel mixture is too lean:
a) The engine overheats.
b) The performance improves when the starter (choke) is opened.
c) Acceleration is poor.
d) Spark plug burns (blistered white insulator)
e) The revolutions of the engine fluctuates and a noticeable lack of power.

Figure 5

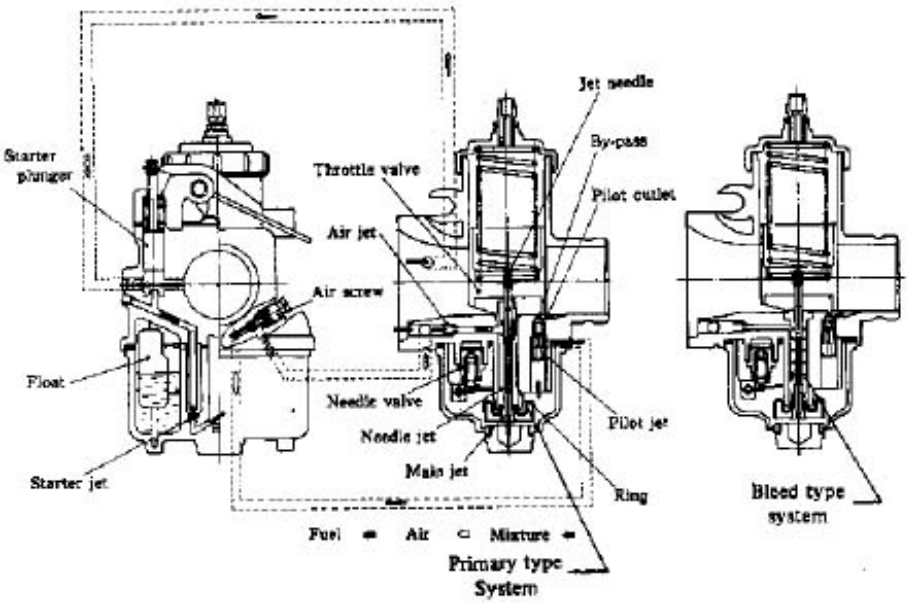
Jet needle
By-pass
Pilot outlet
Starter plunger
Throttle valve
Air jet
Air screw
Float
Needle valve
Needle jet
Main jet
Pilot jet
Ring
Starter jet
Fuel
Air
Mixture
Primary type System
Bleed type system

Chapter 5 *(Mikuni Carburetors)*

Carburetor Troubleshooting Chart

PROBLEM	POSSIBLE CAUSE	CORRECTIONS
HARD STARTING	Incorrect use of choke	Correct use of choke
	Incorrect air-fuel mixture adjustment	Set mixture adjustment screw in accordance with Owner's Manual or shop manual instructions.
	Clogged fuel filter.	Clean filter.
	Clogged low speed fuel jets.	Disassemble carburetor and chemically clean.
	Clogged vent in fuel tank cap.	Unclog vent or replace cap.
	Float stuck. .	Remove float bowl, check float operation and correct or replace
	Float damaged or leaking.	Replace float.
	Incorrect float level.	Set float height in accordance with shop manual specifications.
	Intake air leak.	Check carburetor mounting flanges for air leaks.
	Ignition problem.	Repair, replace or adjust asecessary.

	Low cylinder compression.	Repair, replace or adjust as necessary
POOR IDLE OR STALLING	Idle speed adjustment(s) set too low.	Adjust idle rpm in accordance with specifications in Owner's Manual or shop manual.
	Idle speed adjustments are unequal Equalize throttle stop settings. (twin carburetor models and multi-carburetor models using individual throttle stop adjustments).	Equalize throttle stop setting.
	Clogged idle and low speed air bleed.	Disassemble carburetor and chemically clean
	All causes listed under "HARD STARTING."	
IDLE MIXTURE ADJUSTMENT IS INEFFECTIVE. CARBURETOR DOES NOT RESPOND TO MOVEMENT OF THE IDLE MIXTURE SCREW.	Idle speed set too high.	Adjust idle speed in accordance with specifications in Owner's Manual or shop manual.
	Clogged low speed air-bleeds.	Disassemble carburetor and chemically clean.
	Damaged mixture adjustment needle. .	Replace mixture adjustment needle
	Mixture adjustment needle "O" ring is not sealing (models using "O" ring).	Replace "O" ring.
	Damaged mixture adjustments needle seat.	Replace carburetor.
	All carburetor problems listed under "HARD STARTING."	
SLOW RETURN TO IDLE	Idle speed set too high.	Adjust idle speed in accordance with specifications in Owner's Manual or shop manual.

	Idle speed adjustments are unequal (twin carburetor models and multi-carburetor models using individual throttle stop adjustments.)	Equalize throttle stop settings.
	Throttle valve sticking.	Clean and inspect throttle valve and return spring. Replace if necessary.
	Throttle linkage sticking.	Clean and inspect throttle linkage and return spring. Lubricate, repair or replace as necessary.
	Throttle cable binding	Correct routing or replace cable as necessary.
ENGINE SURGES WHEN CRUISING AT A CONSTANT SPEED	Incorrect air fuel mixture adjustment.	Low speed - Low speed jet size change. Intermediate - jet needle height adjustment. High speed - Main jet size change.
ENGINE DOES NOT DEVELOP FULL POWER OR MISSED ON ACCELERATION.	Incorrect use of choke.	Correct use of choke.
	Clogged air cleaner.	Clean or replace.
	Incorrect air-fuel mixture adjustment	Low speed - Low speed jet size change. Intermediate - jet needle height adjustment. High speed - Main jet size change.
	Throttle valves not synchronized (models with two or more carburetor s)	Adjust throttle valve synchronization
	Clogged fuel filter.	Clean filter.
	Clogged fuel jets.	Disassemble carburetor and chemically clean.
	Clogged air bleeds.	Disassemble carburetor and chemically clean.
	Fuel jets loose.	Tighten fuel jets.

Fuel jets "O" rings leaking (models using "O" rings)	Replace "O" rings
Float stuck	Remove float bowl, check float operation and correct or replace.
Float damaged or leaking.	Replace float.
Incorrect float level.	Set float height in accordance with shop manual specifications.
Ignition problem.	Repair, replace or adjust as necessary.

NOTE: It may be necessary to change carburetor jets to correct the air-fuel mixture rations under the following circumstances: -Exhaust system modifications

-Air cleaner alteration or removal

-Altitude changes

-Temperature and humidity changes

Chapter 6

Power Transmission

The power transmission of the motorcycle is comprised of the clutch, gearbox, propeller shaft and the final drive.

Clutch

The clutch (Fig. 13) relays torque from the engine to the gearbox, disengage the engine from the gearbox during shifting of the gears and during braking to a stop. The clutch provides for smooth starting of the motorcycle from rest, protects the power transmission parts against damage when the engine speed or drive wheel speed is suddenly changed. The clutch is of dry double-disk design.

Figure 13. Clutch

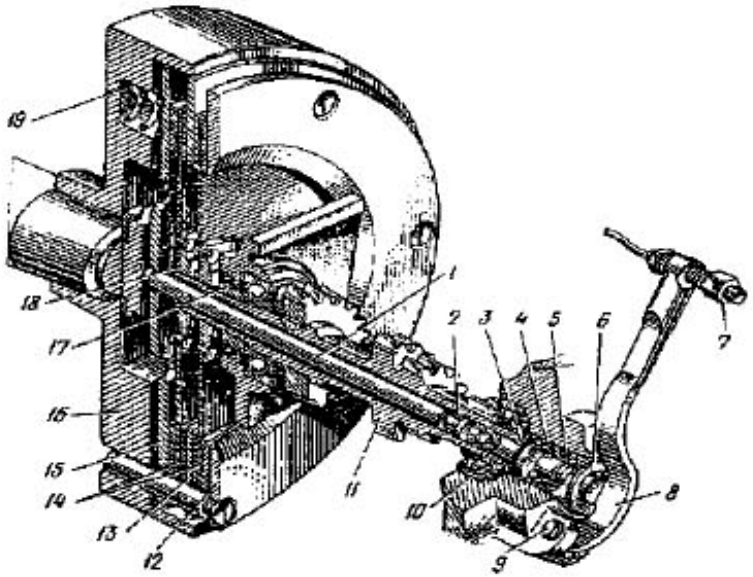

.

1 - Release rod	6 - Slider	11 - Primary shaft	16 - Flywheel

2 - Rod seal	7 - Adjusting screw	12- Thrust plate	17 - Seal
3 - Rod tip	8 - Clutch release lever	13 - Intermediate driving plate	18 - Driven plate hub
4 - Thrust ball bearing	9 - Lever axle	14 - Driven plate	19 - Spring
5 - Slider seal	10 - Clutch primary shaft bearing	15 - Pressure plate	

The clutch release mechanism is controlled by means of the lever on the left grip of the handle bar. With the clutch lever released, the engine is engaged to the gearbox. When the clutch lever is squeezed, the engine is disengaged from the gearbox.

Use the clutch lever for starting from rest, for gear shifting and to downshift, for added braking of the motorcycle. Under conditions of heavy traffic, when gears frequently have to be shifted, do not to slip the clutch too much, as this will cause heavy wear of the disks. When stopped for any length of time (e.g., a traffic light), it is best to shift into neutral and release the clutch lever. Holding the clutch in for long periods will cause excessive heating and wear.

Clutch adjustment. The clutch control lever (located on the handle bar) should have a 5 - 8 mm/0.2 - 0.3 in play. This play is measured at the lever end. The normal play of the lever ensures full engagement and disengagement of the clutch. If the play is smaller than specified, the clutch slips. With excessive play, the clutch drags, i.e. the disengagement is incomplete. Use two adjusting screws (Fig. 13, #7) on the clutch control cable to adjust the play.

Chapter 6 *(Power Transmission)*

Gearbox with Reverse Gear

The principal parts of the gearbox are the split box with covers, clutch shaft and main shaft with gears and shift sleeves, the gear shift mechanism, the kick starter and the reverse gear engagement mechanism.

Shafts. The clutch shaft is installed in the ball and roller bearings. The shaft is made integral with the gear rims of the I, II and III gears. The gear of the IV gear is set on a segment key.

The main shaft is set on two ball bearings. The pinions of the I, II, III and IV gears rotate freely over the splines outer surface. Two sleeves are set on the splines of the main shaft, the gears are connected with the shaft by means of the gear shift sleeve. Involute teeth are threaded on the outer surface of the engagement sleeve of the I and II gears. The gears are lubricated through labyrinth cavities in the casing, axial and radial bores in the shaft.

The gear of the kick starter has an additional small rim.

The intermediate gear is installed on the neck of the bracket which travels in the longitudinal direction of the shaft.

Bronze bushings are pressed into the gear holes of the kick starter, intermediate and I gear of the main shaft.

The **kick starter** (Fig. 15) consists of shaft (Fig. 15, #4) with pawl (Fig. 15, #7), the kick lever with the pedal, return spring (Fig. 15, #1) and kick starter gear (Fig. 15, #3). The shaft is supported by the bushings provided in the gearbox casing.

The **gear shift mechanism** is shown in Fig. 16. The gear shifting is performed in a definite succession. The lower gears are engaged by depression of the pedal front arm, while the higher gears, by depression of the pedal rear arm.

The **reverse gear engagement mechanism** consists of quadrant (Fig. 16, #10) with a shaft and reverse gear engagement lever (Fig. 16, #9) secured on it, and intermediate gear set on the bracket, having longitudinal travel along the shaft from the reverse gear engagement quadrant.

Figure 14 Development of Shafts (with reverse run engaged)

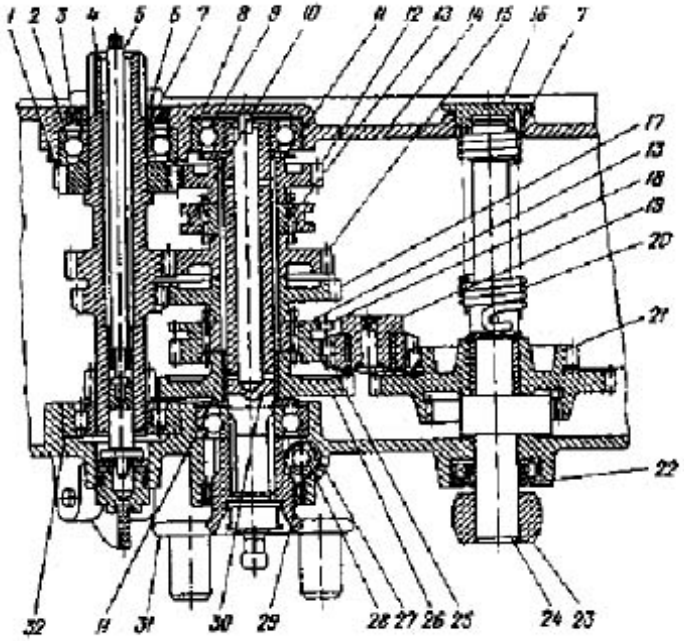

1 - Gear IV of clutch shaft	12 - Gear IV of main shaft	23 - Kick lever 28 - Driven gear to speedometer
2 - Clutch shaft bearing	13 - Main shaft sleeve	24 - Kick starter shaft
3 - Clutch shaft seal	14 - Gearbox case	25 - Intermediate gear
4 - Clutch shaft	15 - Gear III of secondary shaft	26 - Gear of main shaft I gear
5 - Clutch release rod	16- Kick start shaft busing	27 - Main shaft bearing
6 - Clutch shaft sleeve	17 - Gear II of main shaft	28 - Driven speedometer gear
7 - Packing ring	18 - Engagement sleeve of I & II gears	29 - Main Shaft seat 1
8 - Front gearing cover washer	19 - Intermediate gear bracket	30 - Main shaft
9 - Main shaft bearing	20 - Kick starter spring	3l - Flexible disk of propeller shaft sleeve
10 - Engagement sleeve of III & IV gears	21 - Kick starter gear cluster	32 - Clutch shaft roller bearing
11 - Oil washer of main shaft	22 - Kick starter shaft seal	

1 - Return spring
2 - Kick starter shaft bushing
3 - Kick starter gear
4 - Kick starter shaft
5 - Pawl spring
6 - Spring pin
7 - Pawl
8 - Pawl axle
9 - Pawl release
10 - Kick starter buffer pin
11 - Buffer plug
a - Pawl engaged
b - Pawl disengage

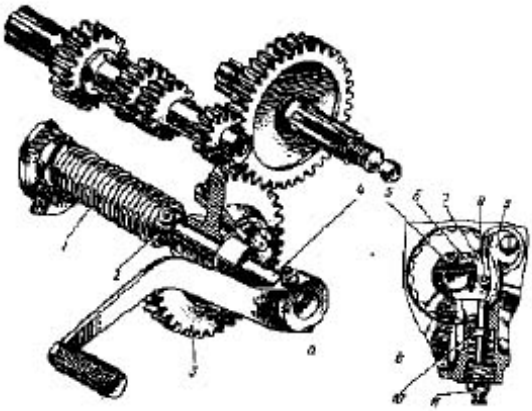

When the reverse gear is engaged, the intermediate gear travels with the bracket along the shaft and connects the small rim of the starting gear with the rim of the sleeve engaging the I and II gears on the main shaft.

The reverse gear must be engaged from neutral.

When the right-hand lever is turned to one third of its travel the gear shift mechanism is set to neutral position. The bracket with an intermediate gear will not move, and the gear is set in neutral position. When the reverse gear engagement quadrant is turned further, the bracket with an intermediate gear travels along the shaft, the reverse gear is engaged, and simultaneously the gear shift quadrant is blocked, thus possibility of simultaneous engagement of two gears is excluded.

When the reverse gear engagement lever is returned to its initial position, the gear shift mechanism is set into the neutral position.

Figure 16 . Schematics of Gear Shift Adjustment Mechanism

1 - Pedal
2 - Pawl with tenon
3 - Return spring
4 - Ratchet
5 - Pawl crank with spring
6 - Lock ring
7 - Quadrant shaft spring
8 - Quadrant spring
9 - Reverse gear engagement lever
10 - Reverse gear engagement quadrant
11 - Gear shift quadrant
12 - Intermediate gear bracket axle
13 - Fork shaft
14 - Shaft fork of III and IV gears
15 - Shaft fork of I and II gears
16 - Pawl crank lever fastening nut
17 - Pawl crank lever
18 - Bushing
19 - Seal
20 - End of quadrant shaft

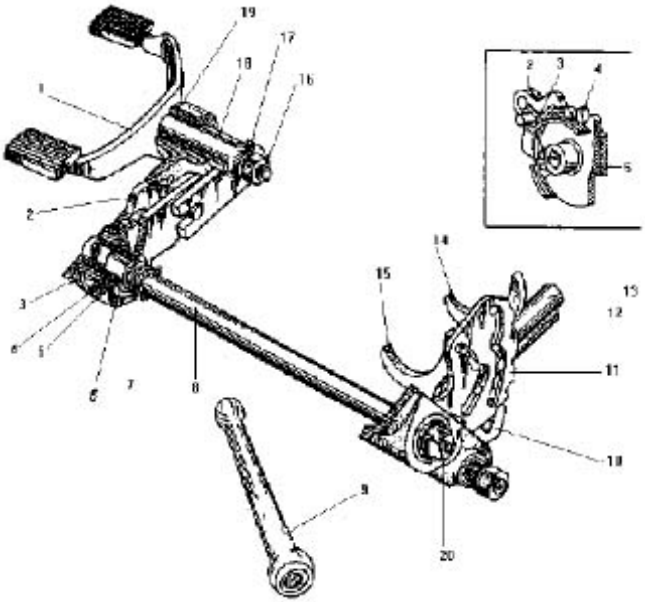

Chapter 6 *(Power Transmission)*

Adjustment of Gear Shift Mechanism

All gearboxes are thoroughly adjusted at URAL America's warehouse prior to shipment to the dealer. The URAL gearbox, once properly adjusted, should last a lifetime with no further adjustments necessary, as the adjusting screws have been "loctited" into proper position. If you experience problems with the gearbox, it usually means some internal problem (like a broken tooth, for example), rather than misadjustment. In case of a problem, we encourage you to contact your dealer for their consultation, instead of readjusting the gearbox, which may only complicate the existing problem.

If you still feel that you need to make a gearbox adjustment, please follow the procedures below.

Figure 17 Schematics of Gear Shift Adjustment Mechanism

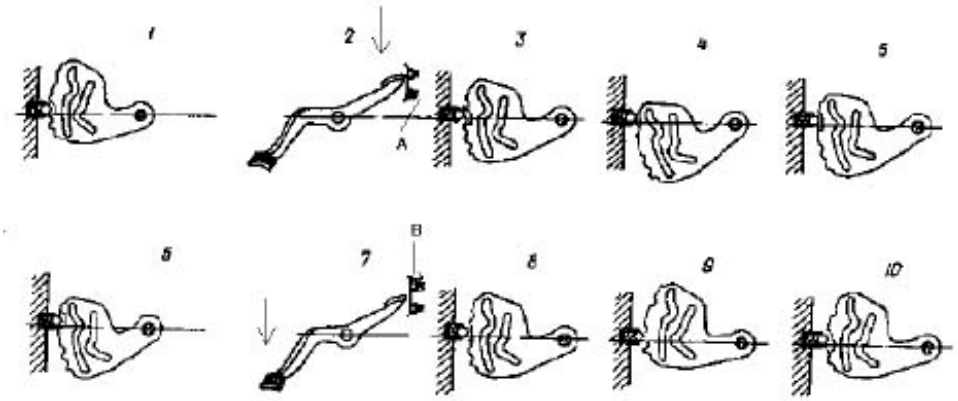

1. Put your URAL motorcycle on the central stand, make sure it's in neutral.

2. Position the locknuts on both adjusting screws so approximately 3 grooves of the screws
show up over both locknuts' top.

3. Screw the adjusting screws into the case until the locknuts touch the case.

4. Remove the black plastic cap located on the right side of the gearbox above the reverse gear lever.

5. Place a 10 mm wrench over the nut located under the removed plastic cap. Move the wrench forward, 2nd gear is the first "click" you hear.

6. Position your body as follows: use your **left foot** to press the gearshift pedal hold the 10 mm wrench positioned as described in Number 5 by your **left hand**, **every time** you make shifts between the gears by pressing the gearshift pedal, rock the rear wheel back and forth with your **right hand**, to make sure it rotates freely and the gears
do not get stuck

. 7. Press the rear of the shift pedal (by doing this you shift to 3rd gear). Your hand holding the wrench should feel the "click". Keep pressing the pedal after you feel this "click" and if the wrench moves further after the "click", use your right arm to screw the **lower** adjusting screw slightly **in**. After doing this, move the wrench back to 2nd gear position and repeat the above test. Keep testing and making adjustments by screwing the lower screw in until the wrench stops moving further after the "click" is felt.

If you feel no "click" at all you should screw **out** the **lower** adjusting screw, still pressing the rear of the pedal shift until you feel a definite "click".

Now your URAL is in 3rd gear.

8. Press the front of the shift pedal (by doing this you shift down from 3rd to 2nd gear). Your hand holding the wrench should feel the "click". Keep pressing the pedal after you feel this "click" and if the wrench moves further after the "click" - use your right arm to screw the **upper** adjusting
screw slightly **in**. After doing this, move the wrench forward to 3rd gear position and repeat the above test. Keep testing and making adjustments by screwing the upper screw in until the wrench stops moving further after the "click" is felt.

If you felt no "click" at all, you should screw **out** the **upper** adjusting screw, still pressing the front of the pedal shift until you feel a definite "click".

9. Now your URAL gearbox is adjusted. You may want to repeat number 6 and 8 procedures again to double check that the wrench

stops immediately after the "click" is felt. After adjustments, tighten the locknuts on both adjusting screws and put the plastic cap back over the nut as described in number 5.

Chapter 6 *(Power Transmission)*

Gearbox (Solo Motorcycle)

The gearbox is of the four speed design equipped with constant meshed gears and gear-shift sliding sleeves. The principal parts included in the gearbox (Fig. 18) are the split box with covers, the clutch shaft and main shaft with gears and shift sleeves, the gear shift mechanism and the kick starter.

Figure 18. Solo Gearbox (section through shafts)

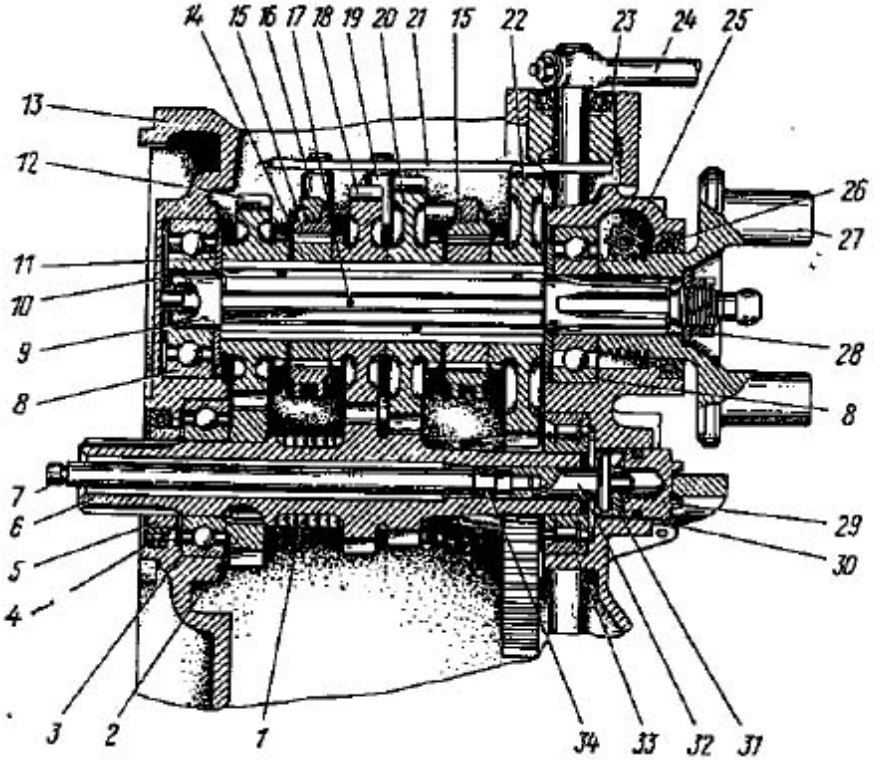

1 - Starter spring	11 - Oil washer of main shaft	21 - Gear shift quadrant
2 - Gear IV of clutch spring	12 - Gear IV of main shaft	22 - Gear I of main shaft

3 - Clutch shaft ball bearing	13 - Clutch crankcase	23 - Right hand cover of gear case
4 - Clutch shaft seal	14 - Main shaft sleeve	24 - Hand gear change lever
5 - Clutch shaft sleeve	15 - Gar shaft sleeve	25 - Speedometer driven gear
6 - Clutch shaft	16 - Gear III and IV shift fork	26 - Main shaft seal
7 - Clutch release rod	17 - Hole for oil feed to gears	27 - Driving plate of flexible coupling of propeller shaft
8 - Main shaft ball bearing	18 - Gear III of main shaft	28 - Main shaft nut
9 - Main shaft	19 - Gears I and II shaft fork	29 - Clutch release slider
10 - Front bearing cap washer	20 - Gear II of main shaft	30 - Slider seal

The **kick starter** (Fig. 19) consists of shaft (Fig. 19, #4) with pawl (Fig. 19, #7) secured thereon, the kick lever with the pedal, return spring 1 and kick starter gear (Fig. 19, #3). The shaft is supported by the bushings provided in the gearbox.

Figure 19. Kick Starter

1 - Return spring
2 - Kick starter shaft bushing
3 - Kick starter gear
4 - Kick starter shaft
5 - Pawl spring
6 - Spring pin
7 - Pawl
8 - Pawl axle
9 - Pawl release
10 - Kick starter buffer pin
11 - Buffer plug
A - Pawl engaged
B - Pawl disengaged

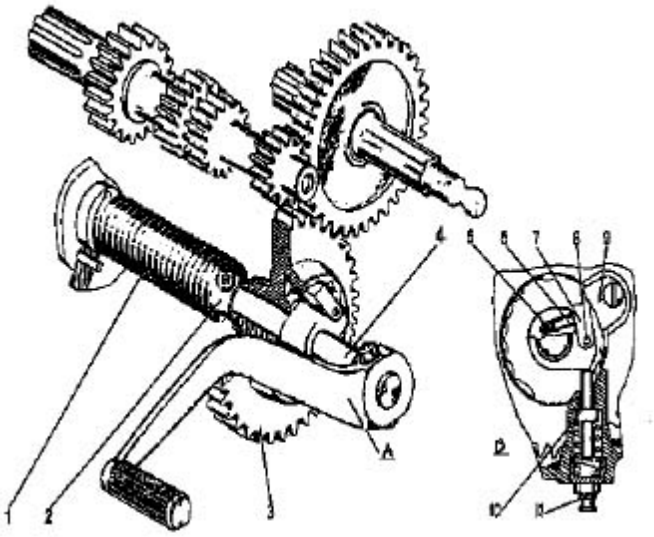

Figure 20. Gear Shift Mechanism

1 - Gear shift pedal
2 - Pawl with tenon
3 - Return spring
4 - Ratchel
5 - Pawl crank with pin
6 - Lock ring
7 - Quadrant shaft spring
8 - Gear shaft quandrant
9 - Hand gear change lever
10 - Quadrant lock
11 - Gear change fork shaft
12 - Shift fork of III and IV gears
13 - Shaft fork of I and II gears
14 - Nut
15 - Pawl crank lever
16 - Sleeve
17-Seal

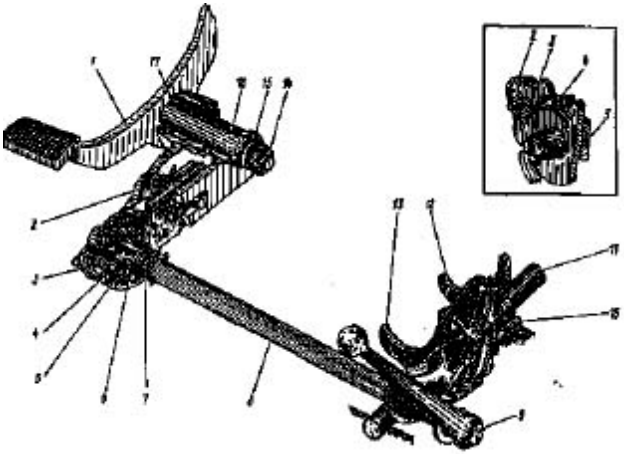

The **gear shift mechanism** is illustrated in Fig. 20.

The hand shift lever, located on the right side of the transmission, may be in five different positions. The I gear is engaged when the gear change lever is pulled back as far as possible, while by pushing the lever forth, the II, III and IV gears are engaged one after another. The neutral position (idling) is obtained by setting the lever between the I and II gears. The hand lever assures not only shifting of the gears in succession, but also in any versions, for instance, from the lowest gear directly to the highest one and vice versa. The main application of the lever, however, is to set the gearbox sleeves into the neutral position.

The gear shift pedal is used to change gears in a definite succession. The lower gears are engaged by depressing the front arm of the pedal, while the rear arm of the pedal is depressed for higher gears.

Adjustment of gear shift mechanism. Adjust the gear shift mechanism by means of stops (adjusting screws) which restrict the turn of the pawl crank (Fig 21), and consequently, the stroke of the gear shift pedal.

The process of adjusting the shift quadrants is identical to that described earlier in this chapter for the gearbox with reverse gear.

Gearbox maintenance. During everyday preventive inspection, check the bolts for tightness and the nuts for fastening the gearbox.

Figure 21. Schematics of Gear shift Adjustments

* The gearbox may incorporate parts normally used in the reverse gear gearbox.

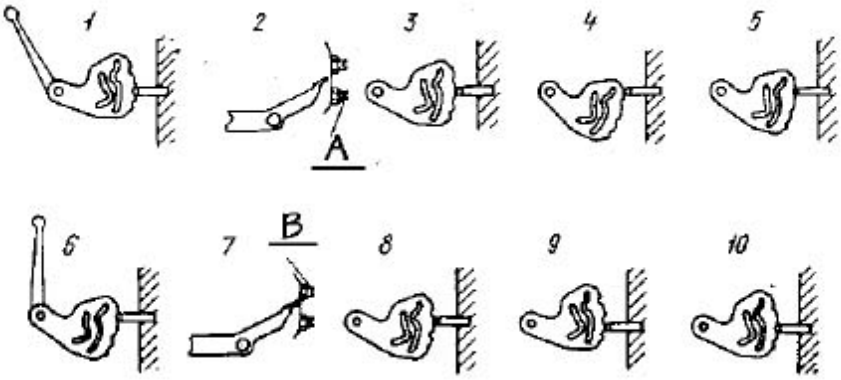

Every 500 km check oil level in the gearbox and fill to required level.

Every 10,000 km change oil in the gearbox. Remove the filler and the drain plugs and drain oil. Replace the drain plug and fill the gearbox with 400 cm^3/0.4 qt, minimum, of the oil used for the engine; next start the engine, install the motorcycle onto the stand, shift in the III or IV gears for 2 or 3 min. Then drain the oil and fill the gearbox with 19.5 oz. of fresh oil and 12 oz. of URAL Oil Treatment. In winter fill the gearbox with warm oil.

CAUTION: Severe damage due to insufficient lubrication of gears, shafts and bearings can result if the oil level is allowed to get lower than the specified level.

Chapter 6 *(Power Transmission)*

Final Drive

The final drive is devised as a pair of helical bevel gears housed in a casing which serves at the same time as a plate for the brake shoes, as an oil tank and a support for the right-hand end of the rear wheel axle. The casing has an oil drain hole at the bottom that is blanked off with a plug. Cover (Fig. 22, #34) attached to the casing has a slot and two studs used to fasten the whole drive to the swinging fork arm of the rear suspension. A hole is provided in the cover for filling of oil.

Installed between the side portion of casing cover and the inner race of ball bearing (Fig. 22, #36) is adjusting washer (Fig. 22, #35) for adjusting the backlash between the gear teeth. For proper performance of the drive a 0.1 to 0.3 mm / 0.004 to .012 in. backlash is necessary between the active faces of gears.

CAUTION: Bearing nut (Fig. 22, #31) is left hand threaded.

Maintenance of propeller shaft and final drive. The daily maintenance involves tightening the nuts which fasten the final drive to the swinging fork arm. Failure to tighten the nuts in due time results in loose joints and destruction of the final drive cover.

Every 5,000 km change oil in the final drive casing. For this purpose undo the filler and drain plugs and drain used oil. Fill the casing with oil used for lubrication of the engine and flush the final drive by turning the rear wheel several times. Drain oil and prime the casing with 3.85 oz.of premium grade automotive 80/90w Gearlube. Add friction reducing additive of choice.

Every 10,000 km, lubricate the needle bearings of the universal joint cross. Dismantle the final drive and, using a grease gun, stuff grease into the cross through the grease cup.

Chapter 6 *(Power Transmission)*

PROPELLER SHAFT DRIVE

The propeller shaft drive (Fig. 22) incorporates the flexible joint, the propeller shaft and the universal joint. The flexible joint is essentially a coupling sleeve fitted with plates and pins. Propeller shaft (Item 23) is aligned by means of the ball end of the main shaft which enters the socket in the front end of the propeller shaft.

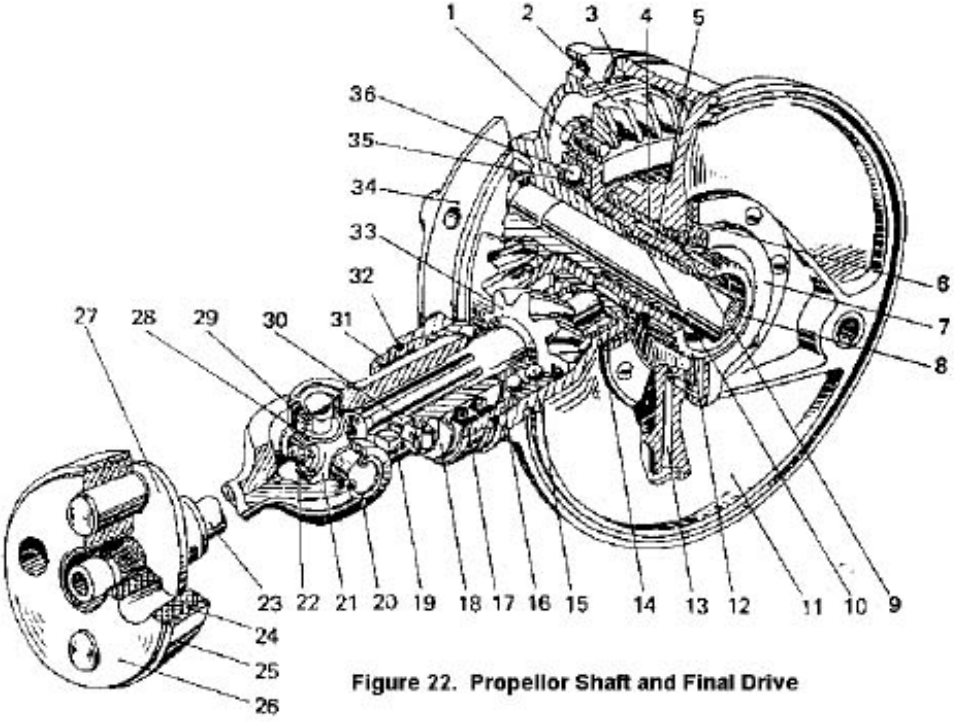

Figure 22. Propellor Shaft and Final Drive

1 - Driven gear fastening bolt	13 - Oil drain duct	25 - Hood
2 - Driven gear rim	14 - Needle bearing	26 - Propeller shaft collar

3 - Gasket	15 - Double-row ball bearing	27 - Flexible joint driven disk
4 - Crankcase bushing	16 - Adjusting washer	28 - Packing ring
5 - Needle bearing roller	17 - Universal joint fork seal	29 - Needle bearing
6 - Casing seal	18 - Protective washer	30 - Wedge belt
7 - Seal cover	19 - Universal joint splined fork	31 - Bearing nut
8 - Rear wheel axle	20 - Lock ring	32 - Gasket
9 - Seal spring	21 - Universal joint cross	33 - Driving gear
10 - Distance bushing	22 - Grease cup	34 - Casing cover
11 - Casing	23 - Propeller shaft	35 - Adjusting washer
12 - Driven gear hub	24 - Lock ring	36 - Ball bearing

Chapter 7

Running Gear

The running gear of the motorcycle is comprised of the motorcycle and the sidecar frames, front fork, rear wheel and the sidecar wheel suspension, wheels and the seat.

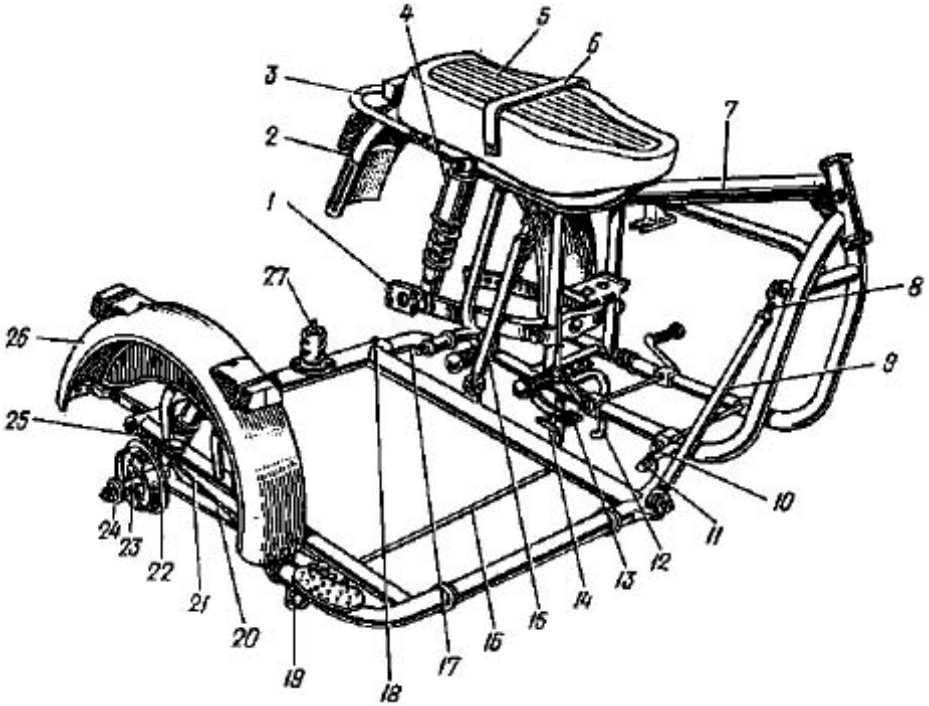

Figure 23. Motorcycle and Sidecar Frames

1 - Rear suspension swinging arm	10 - Collet clamp	20 - Lever - sidecar wheel
2 - Rear mud shield	11 - Collet clamp screw	21 - Brake tie rod
3 - Rear grab bar	12 - Motorcycle stand	22 - Brake drum cover
4 - Spring loaded hydraulic shock absorber	13 - Brake pedal	23 - Sidecar wheel axle
5 - Seat (Saddle or Tractor)	14 - Sidecar wheel brake lever	24 - Protective hood

6 - Strap	15 - Sidecar frame legs	25 - Tie rod nut
7 - Motorcyclel frame	16 - Sidecar wheel brake rod	26 - Sidecar fender
8 - Sidecar adjusting strut	17 - Rear collet clamp bracket	27 - Rubber member of body suspension
9 - Sidecar frame legs 19 - Lever pins	18 - Rear bracket fastening bolt	28 - Parking brake
	19 - Lever pins	

Chapter 7 *(Running Gear)*

Motorcycle and Sidecar Frames

The frame is the principal bearing element of the motorcycle to which all the units and assemblies of the motorcycle are attached. The motorcycle is furnished with a twin closed frame of welded construction. For the design features and principal members of the motorcycle and the sidecar frames refer to Fig. 23.

The frame of the solo motorcycle differs from that shown in Fig. 23 in the absence of the sidecar fasteners and the parking brake mechanism, availability of the side leg and welded on brackets for fastening of the air pump.

The sidecar frame is coupled to the motorcycle frame through collet clamp (Fig. 23, #10) and rear collet clamp bracket (Fig. 23, #17) and two frame legs (Fig. 23, #9) and (Fig. 23, #15). The brackets welded to the frame at the rear are used for mounting the rubber members of the body suspension. The swinging arms are connected to the frames by means of silent blocks. The vertical stresses arising due to road bumps are cushioned by the spring loaded hydraulic shock absorbers. The hinge joints of the shock absorbers with the swinging arms and the frame are mounted on rubber bushings.

Chapter 7 *(Running Gear)*

Spring Loaded Hydraulic Shock Absorber

The suspension spring and the hydraulic shock absorber (Fig. 24) perform different functions. The supporting spring (Fig. 24, #4) serves as an elastic element of the suspension, while its oscillations are damped by the double-acting hydraulic absorber enclosed in body (Fig. 24, #7) inside the suspension spring (Fig. 24, #4).

The suspension features cam-type adjusters (Items 11 and 12) used for varying the pretension of the supporting springs to suit the load and the road condition. The degree of tension of the springs is adjustable allowing two positions. The first (lower) position corresponds to the load due to the motorcycle's own mass, the driver's and one passenger's (sitting in the sidecar) mass; the second (upper) position of moving cam (Fig. 24, #11) corresponds to the maximum load.

When the motorcycle is used under the maximum load, adjusting the spring in the sidecar
wheel shock absorber simultaneously with adjusting the compression of the spring in the motorcycle shock absorbers.

Care of shock absorbers. Fill the shock absorber with 105 cm^3 of hydraulic fluid composed of industrial oil or spindle oil. Change hydraulic fluid every 10,000 km. Each time during maintenance, check the bolts fixing the top and bottom ends of the shock absorbers for tightness.

Figure 24. Spring-Loaded Hydraulic Shock Absorber

1 - Upper tip	12 - Fixed cam	23 - Compression valve stem
2 - Retainer	13 - Lower end piece .	24 - Compression valve assy
3 - Housing	14 - Compression valve body	25 - Piston
4 - Spring	15 - Rebound valve nut	26 - Rod guide
5 - Buffer	16 - Rebound valve spring	27 - Seal spring
6 - Barrel nut	17 - Rebound valve retainer	28 - Container nut seal
7 - Shock absorber body	18 - Rebound valve plate	29 - Seal holder

8 - Working cylinder washer	19 - Rebound valve throttle plate	30 - Seal
9 - Rod	20 - Intake valve plate	31 - Rubber seal of rod
10 - Check ring	21 - Bypass valve spring	32 - Felt seal of rod
11 - Moving cam	22 - Bypass valve retainer	33 - Pressure washer

Chapter 7 *(Running Gear)*

Adjustment of Sidecar Installation

(Single Wheel & Dual Wheel Drive)

Note: Sportsman (driven sidecar wheel model) should be set-up with no toe-in and 1° or less lean out.

The sidecar should be installed in a definite position relative to the motorcycle. The position is determined by the camber and toe-in of the motorcycle and the sidecar wheels (Fig. 25). An incorrectly aligned sidecar will drag the motorcycle to either side and cause extensive tire wear. If the motorcycle is not stable on the road or is difficult to steer, check alignment. Checking and measuring the alignment should be carried out on level ground.

Check toe-in of the motorcycle and the sidecar wheels with the aid of two straight bars applied to the side faces of the wheels just below the axles. The toe-in should be 10 mm or 3/8 in. at the front wheel. When adjusting, unbolt the top of the slanting legs fastening the sidecar to the motorcycle, slacken off the bolt clamping the lower rear bracket, adjust the position of the bracket relative to the rear tube of the sidecar frame to obtain necessary toe-in of the

wheels. Tighten up the bolt fastening the bracket, adjust the length of the legs and secure them with bolts.

Check the lean-out of the motorcycle using a level gauge or protractor with a plump bob and a ruler. Adjust the two inclined legs by screwing the forks in or out

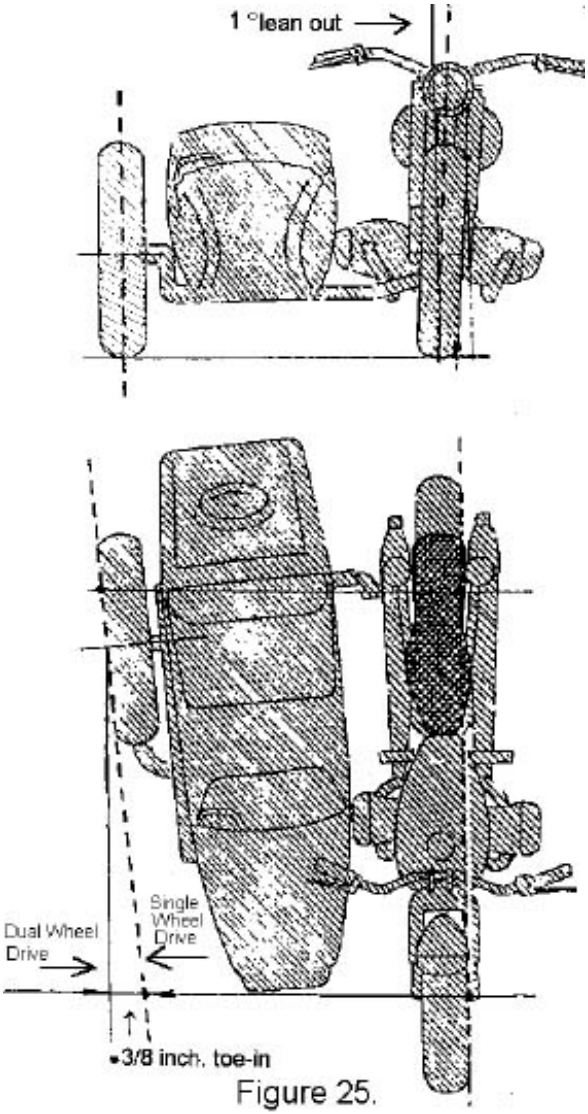

Figure 25.

Check the lean-out angle while the motorcycle is running on the road. With the lean-out properly adjusted, the motorcycle will not pull to either side while running at normal road speed. If it pulls to the right, increase the lean-out to 2° or 3°. If it pulls to the left, decrease the lean-out.

CAUTION: Double check for correct toe-in before making any change to lean-out.

Chapter 7 *(Running Gear)*

Front Fork

The **telescopic front fork** used on the Solo, Cruiser, and Utility models is equipped with inside springs and the double-acting hydraulic shock absorber.

The front fork (Fig. 26) is made up of stem (Fig. 26, #8), the steering column with bridge (Fig. 26, #16), cross-piece (Fig. 26, #3), two fork legs with shock absorbers and the steering damper. Each fork leg is primed with 135 cm^3/0.3 pt of oil through the holes of tightening nuts (Fig. 26, #11).

In assembling the front fork it is important to ensure a 0.2 - 0.5 mm/.008 - .020 in clearance between the spring tip and the locknut of the nut tightening the fork leg tube so as to ensure free rotation of the tightening nut with the stem.

The **leading link front fork** used on the Tourist and Sportsman models use a front lever-type fork with two interchangeable spring-hydraulic shock absorbers (Fig. 27).

The friction type **steering damper** is made up of two steel washers, moving (Fig. 27, #37) and fixed (Fig. 27, #39), two fiber washers (Fig. 27, #17) and tightening bolt (Fig. 27, #7) with a head. Friction between the steel and the fiber washers makes turning of the front fork more difficult.

WARNING: Do not over tighten the steering damper (especially on the Solo model) since the motorcycle will become very difficult to handle.

Chapter 7 *(Running Gear)*

Steering Head Bearings

The steering head bearings must be adjusted periodically to avoid excessive play which might cause steering instability. When properly adjusted the front fork should turn with just a hint of bearing drag, but not free play or obvious resistance to turning.

WARNING: Improper adjustment of the steering head (e.g. too tight) will make the motorcycle very difficult to steer. This adjustment is critical for proper handling of all models.

Figure 26. Front Fork

1 - Safety washer
2 - Seal
3 - Fork cross piece
4 - Steering column stem nut
5 - Supporting washer
6 - Spring washer
7 - Tightening bolt
8 - Steering column stem
9 - Bearing nut
10 - Top angular ball
11 - Tightening nut
12 - Top end of spring
13 - Packing ring of cover
14 - Fork leg cover with headlight bracket
15 - Union bolt
16 - Steering column bridge
17 - Friction washers
18 - Spring
19 - Collar
20 - Seal collar
21 - Seal spring
22 - Supporting ring
23 - Upper bushing
24 - Fork leg tube
25 - Fork leg tip
26 - Pin
27 - Damper body tube
28 - Damper body cone
29 - Damper fastening
30 - Lower bushing
31 - Lower guide of damper
32 - Damper piston
33 - Spring ring

34 - Damper rod
35 - Damper tube nut
36 - Rubber seal
37 - Moving washer
38 - Bottom angular ball bearing
39 - Fixed washer of steering damper
40 - Head tube of frame
A - Cavity under piston
B - Cavity above piston

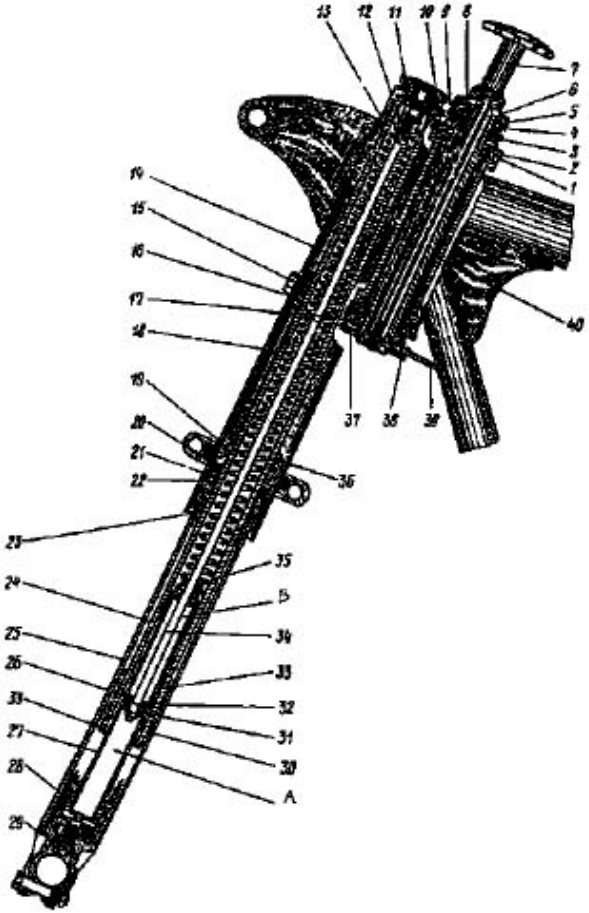

To adjust the bearings:

1. Jack up the motorcycle front so that the front wheel does not contact the ground.

2. Undo the tightening bolt of the steering damper, remove the spring and the supporting washers, holding the damper washers by hand.

3. While rocking the front fork up and down with the handle bar or with the fork leg tips, determine if there is any play.

If play in bearings is evident, unlock and slacken off nut (Fig. 27, #4) of the steering column stem, move up cross-piece (Fig. 27, #3) with the nut, having first released tightening nuts (Fig. 27, #11) of the fork legs. Tighten bearing nut (Fig. 27, #9) and release it 1/8 - 1/6 of revolution. Check the play in the bearings once again. The front fork must freely turn.

Reinstall the cross piece, tighten the nuts including lock nut (Fig. 27, #4) and reinstall all other parts of the steering damper and

check once again that bearing clearance is now acceptable.

Figure 27. Lever-Type Front Fork

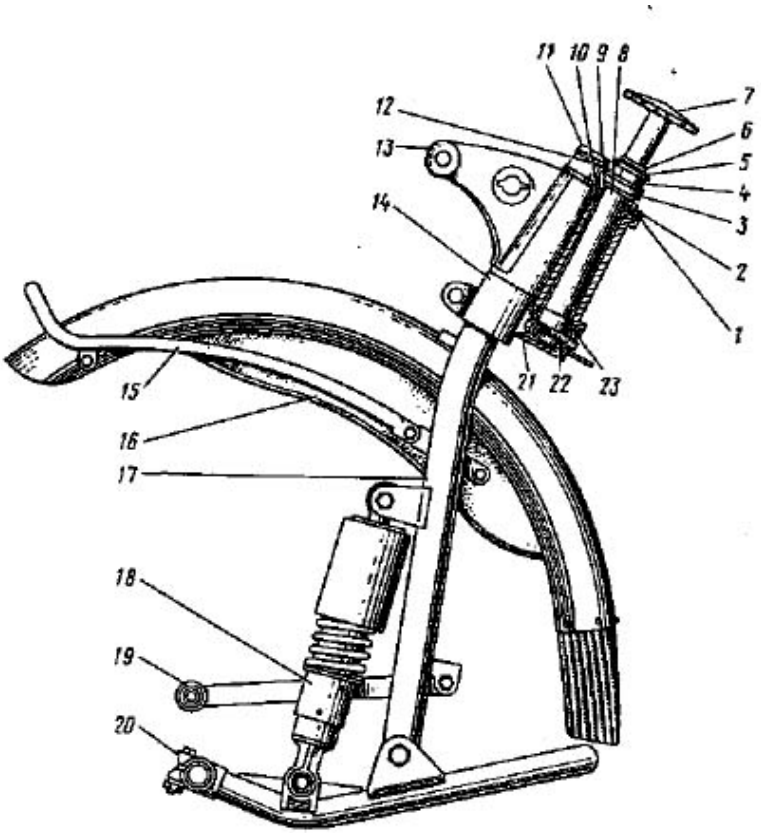

1 - Protective washer	9 - Bearing nut	17 - Fork leg left tube
2 - Seal	10 - Upper radial-thrust ball bearing	18 - Spring-hydraulic shock absorber
3 - Fork crosspiece	11 - Tightening nut	19 - Brake drum cover tie rod
4 - Nut of steering column stem	12 - Washer	20 - Wheel lever
5 - Supporting washer	13 - Leg housing with headlight	21 - Moving washer
6 - Spring washer bracket	14 - Steering column bridge	22 - Steering column bridge
7 - Clamping bolt	15 - Fender clip	23 - Lower radial-thrust ball
8 - Steering column stem	16 - Front fender bearing	

Chapter 8

Wheels and Tires

The URAL motorcycle is equipped with easily demountable interchangeable wheels with the cast (aluminum) brake drum on short spokes of the same size. Inner splines provided at the right-hand side of the hub receive the splined end of the final drive hub in case the wheel is used as a drive wheel. The bearings are packed with grease (refer to lubricant chart).

Pneumatic tires are made up of a straight-side casing, an inner tube and a flap.

To prevent sinking of nipples while the tire is being inflated, it is advisable to use a threaded pipe union of an air pump hose. The tire flap is arranged between the wheel rim and the inner tube to protect the latter against mechanical damages inflicted by protruding spoke ends and nipples.

Care should be taken to keep tires properly inflated. See TIRE DATA (chapter 13), for correct cold tire inflation pressures. Check before riding when tires are cold. Do not over-inflate tires.

WARNING: Improper tire inflation will cause abnormal tread wear and could result in unstable handling. Under-inflation could result in the tire slipping on the rim.

Check inflation pressure and inspect tread for punctures, cuts, breaks, etc., at least weekly if in daily use or before each trip, if used occasionally.

WARNING: Riding with excessively worn, unbalanced or improperly inflated tires is hazardous and will adversely affect traction, steering and handling. Same as original equipment tires must be used. Other tires may not fit correctly and may be hazardous to use.

Because tires, tubes and wheels are critical safety items and servicing of these items requires special tools and skills, we recommend you see your URAL dealer for these services.

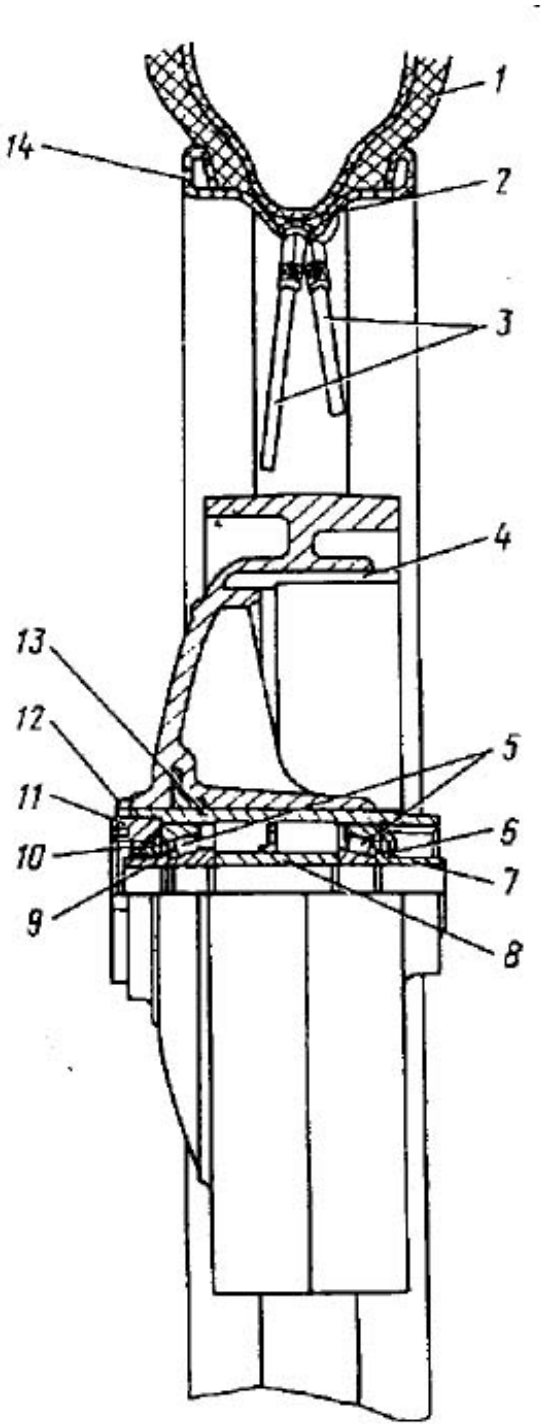

Figure 29. Motorcycle Wheel

1 - Tire
2 - Tire flap
3 - Spokes
4 - Brake drum
5 - Roller bearings
6 - Thrust washer
7 - Right-hand distance bushing
8 - Intermediate bushing
9 - Left-hand distance bushing
10 - Seal
11 - Seal nut
12 - Locknut
13 - Hub
14 - Wheel rim

Adjustment of wheel bearings. After 5,000 km be sure to check the condition and adjustment of the bearings. In adjusting adhere to the following sequence:

> Remove the wheel from the motorcycle. Fit the rear wheel axle (less the protective hood), tighten it by nut with the aid of a bushing, 100 mm long, with 21 mm bore and 25 - 30 mm O. D. or a set of bushings of the given size. Determine whether there is play by turning the axle (but not the wheel on the axle) and rocking it. Slacken off the locknut. Screw the seal nut up to the limit, then loosen it by 1/6 - 1/8 of the revolution so that the axle-bushing system revolves without play, easily, without jamming. Draw up the locknut safely without disturbing the adjustment of the bearings. Pull the axle out. Reinstall the wheel on the motorcycle.

Removing wheels. To remove the front wheel, set the motorcycle on its stand, lift it by the front wheel and put a rest under the front portion of the motorcycle frame. (You may want to purchase a scissor jack or bottle jack to carry along in the sidecar storage compartment. This will make it easier to change any of the three wheels on the rig.) Turn home the adjusting screw of the front brake cable and install it so that the screw slot falls onto that of the bracket head. Pull the brake lever up, take the cable enclosure end out of the notch in the adjusting screw and extract the cable through the slots of the screw and the bracket. Bring the hand brake cable end out of the hole in the brake lever making the cable match the lever slot. Slacken the nut of the union bolt at the end-piece base of the fork left-hand leg. Screw out the axle turning it clockwise (left-hand thread) and remove the wheel together with the front brake.

To reinstall the front wheel on the motorcycle follow the reverse order of the above operations seeing to it that the torque stop on the brake cover encompasses the right-hand leg of the fork.

Before final tightening of the axle bolt shake the motorcycle front several times to allow the forks to align themselves.

To remove the rear wheel of the motorcycle, lift the center stand onto an 8" long piece of 1" x 4" wood or equivalent, undo the rear wheel axle nut and take it off together with the washer, slacken off the nut on the union bolt of the left-hand leg of the swinging arm, extract the rear wheel axle with the help of a wrench bar and remove the wheel. If the rear wheel is flat, it is easier to first run the rear wheel onto a piece of 2" x 4" wood before lifting the motorcycle on the center stand on top of another piece of 2" x 4".

To reinstall the wheel on the motorcycle follow the reverse order of operations. Prior to reassembling, wipe the axle and grease it. Fitting the rear axle, turn it as you push it in to avoid jamming. Before tightening the axle bolt, bounce the rear portion of the motorcycle several times.

To remove the spare wheel, use the wrench from the tool kit that

has two studs that fit the two holes in the round nut holding the luggage rack down.

Chapter 8 *(Wheels and Tires)*

Running Gear Maintenance

During the pre-trip inspection, check air pressure in the tires (chapter 1).

Check assembly units and parts for safe fastening, be sure to tighten the fasteners and eliminate play as soon as they get loose or demonstrate excessive play.

While lubricating, consult the Lubrication Chart in chapter 11.

After the initial 200 km, check and retighten the nipples of the wheel spokes. In service, check periodically, but at least every 2,500 km, the tension and condition of the wheel spokes (do this with wheels jacked up).

Every 5,000 km: check the condition of the motorcycle, toe-in of the sidecar, the lean-out angle of the motorcycle and adjust the wheel bearings, if necessary; rotate the wheels (including the spare) proceeding in clockwise direction to keep tread wear even on all tires.

Every 10,000 km, check and change, if required, grease in the bearings of the wheel hubs and adjust them.

WARNING: Wheel truing involving more than 2 turns of any spoke nipple should be accomplished with the tire dismantled so that spoke ends can be checked to ensure no spokes protrude into the inner tube.

Chapter 9

Control Levers and Cables

Handle Bar and Controls

The handle bar is mounted on the front fork through two brackets secured on the cross-piece of the front fork. The handle bar is adjustable in the brackets.

The throttle control twist grip is linked to the carburetor throttles by flexible control cables. The clutch lever is linked to the clutch release arm by a cable. The front brake lever is connected by the cable to the lever mounted on the front brake drum cover.

Brakes

The motorcycle is equipped with shoe-type brakes. The brake consists of a drum, a drum cover, shoes and lever activated cams.

The **front wheel brake** (Fig. 30) is of the double-cam type.

Tie rod (Fig. 30, #11) of the upper and lower levers of the brake is factory-adjusted to length so the brake cams are equalized. To return the levers to their initial position, a spring (Fig. 30, #9) is installed on the bottom lever.

The brake shoes are provided with adjusting bolts (Fig. 30, #5) to compensate for the wear of the shoe linings. The adjusting bolts of the brake shoes may be used for adjusting the gap between the brake shoes and the brake drum.

For normal performance of the brake, leave a gap between the shoes and the drum. If there is no gap, the brakes will overheat during the motorcycle run bringing about rapid wear of the linings, or, if they are too tight, seize the wheel. On the other hand, if the gap is too large, the brake cannot be fully applied.

For checking the gap the cover of the brake drum and final drive crankcase are provided with an inspection hole, closed with a rubber plug.

The **sidecar wheel brake** is connected to the rear brake pedal (Fig. 31).

The sidecar brake drum cover is secured on the sidecar wheel axle and is held from rotation by a torque stop. Sidecar brake

shoes are interchangeable with the motorcycle brake shoes.

The **rear wheel brake** is mounted in the final drive case.

Figure 30. Fron

Wheel Brake

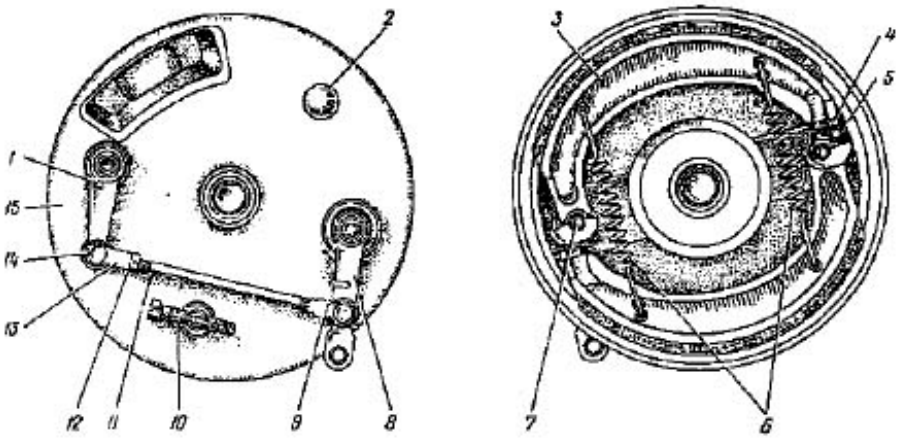

1 - Top brake lever	9 - Brake lever spring
2 - Inspection hole plug	10 - Adjusting screw
3 - Brake shoe	11 - Tie rod
4 - Adjusting bolt locknut	12 - Locknut
5 - Adjust bolt	13 - Tie rod fork
6 - Brake shoe springs	14 - Pin
7 - Front brake cam	15 - Brake drum cover
8 - Bottom brake lever	

Figure 31. Sidecar Wheel Brake

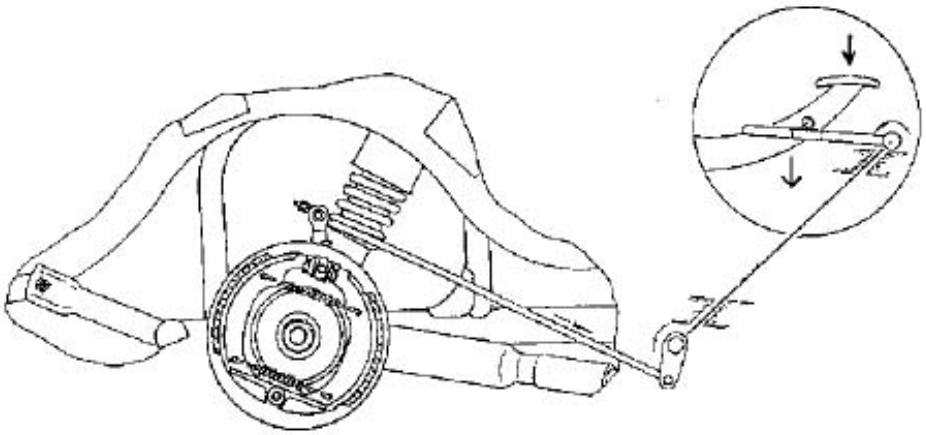

Chapter 9 *(Control Levers and Cables)*

Brake Adjustment

Note: The front brake lower lever is set at a distance of 85 mm/3.3 in from its vertical axis to the adjusting screw bracket center. Angle of deviation of the rear brake lever backward from the vertical axis of the final drive equal to 33±5° should be ensured after disassembly of the lever with the brake shoes cam. The brake adjustment is performed with the wheels jacked up.

The front wheel brake is adjusted by an adjusting screw located on the drum cover and the foot brake, by an adjusting nut situated on the rear end of the brake tie rods.

Proceed to adjustment of the foot brake starting from the rear wheel, having first slackened the nut on the tie rod of the sidecar wheel brake. Then adjust the sidecar wheel brake by tightening the nut on the brake tie rod. After the foot brake has been adjusted properly, back up the nut on the tie rod of the sidecar wheel brake by 2-3 turns to keep if from pulling to the right when applying the brake.

Brakes should be "burnished in" during the initial running in period. Speeds during this period should not exceed 45 mph/70 kmh with sidecar attached, 50 mph/90 kmh without sidecar (see "Speeds Recommended for Running-in" table). Follow burnishing procedures carefully. Make approximately 100 stops using 75% of full braking power. This can be done over several periods and need not be done in one session. Choose an area with clean, dry pavement and no obstructions. Travel in a straight line and apply both the hand (front) brake as well as the foot (rear and sidecar) brakes.

After burnishing the brake shoes, adjust your brakes on each wheel to reduce the gap between shoes and drums. This procedure will ensure maximum braking performance during the running-in period and is essential before raising your top speed, after your URAL has been carefully run in (after 2,500 km).

WARNING: Because brake performance is a critical safety item, we recommend that you see your URAL Dealer for these services.

Brakes must be inspected for wear every 2,500 km - 5,000 km. If the brake shoe friction material is 1/16 in. thick or less (the thickness of a nickel) the shoes must be replaced immediately. Failure to replace shoes when necessary could

result in brake malfunction and personal injury. If you ride under adverse conditions, steep hills, heavy traffic, etc., more frequent inspection, 1,000 km or less, will be necessary. We do not recommend using the rear brake only.

Chapter 9 *(Control Levers and Cables)*

Control Cable Adjustment

The control cables are adjusted by screw adjustments at the cable ends.

With the control levers released:

for the clutch a play at the clutch lever end should be equal to 5 - 8 mm/0.2 - 0.3 in

for the brakes - a 0.3 - 0.7 mm/0.012 - 0.028 in. gap between the brake shoes and the brake drums, for this purpose a 5 - 8 mm/0.2 - 0.3 in. play of the front brake control lever and a play of the rear brake pedal equal to about 25 - 30 mm/1- 1.2 in. of the full stroke of the pedal are required

for the carburetors - carburetor throttle synchronized

With the control levers (handles) fully depressed:

for the clutch — complete disengagement of the engine from the transmission; noiseless shifting of gears means good adjustment of the clutch cable.

for the carburetors — lift of throttles to the maximum and equal height

for the brakes — effective braking of the motorcycle before levers reach limits.

The brakes are checked when the fully laden motorcycle is running on dry asphalt or concrete pavement. This check is done at a slow speed.

Control Cable Maintenance

The daily preventative maintenance involves checking the functioning, condition and fastening of the tie rods, cables and braking action. Refer to the Maintenance Summary Schedule in chapter 11 for lubricating and schedule.

After every 5,000 km, check the condition of the brakes, clean the brake shoes and the active surface of the brake drums, lubricate the hinge pins and the cams of the brake linings, the joints, the linkage of the rear and sidecar wheel brakes, the lever axle, the parking brake bearing, the throttle control twist grip, the lever pins and ends of cables used in the clutch, the front brake

control, the control cables used in the clutch, the front brake and the throttles.

Chapter 9 *(Control Levers & Cables)*

Speedometer

The speedometer scale is illuminated with two lamps. The speedometer is driven by the main shaft of the gearbox via a flexible shaft.

After every 10,000 km add five or six drips of oil into the union butt end to lubricate the speedometer axle. Wash and lubricate the flexible shaft used in the speedometer drive.

Chapter 10

Electrical Equipment

The electrical equipment of the motorcycle (Fig. 32) includes power supplies, auxiliary instruments and electric wiring.

Electric power supplies are storage battery and an AC generator with a built-in rectifier.

A single wire system is employed for wiring the electric circuit, i.e. a single wire runs from the electric power supplies to the electric loads (from the positive poles of the storage battery and the generator), and the frame and other metal parts of the motorcycle serve as the second wire or the ground. The negative pole of the storage battery is connected to the ground through the switch and in the generator the connection to its own casing is provided.

Battery (Fig. 32, #24) supplies electric power to all the systems of the motorcycle both with the engine inoperative and at low RPM. The storage battery is rated at 12 V, 9 amp hours. For its technical description and maintenance refer to the separate section in chapter 11. (Note: on electric start models the 9amp hour battery is replaced with a larger capacity battery with 270 cold cranking amps and 18 amp hours.)

The **generator with built-in rectifier** is driven by the engine camshaft driven gear. The transmission ratio between the engine crankshaft and the generator shaft is 1.33. The generator is secured with two studs on the engine crankcase. At the drive side the generator cover is so devised that by turning the generator on the studs, the adjustment of the gear mesh gap can be accomplished.

Do not disassemble the generator completely before the warranty term elapses. Do not run the generator at no-load (in case of a break or disconnection of wires running to the electric load), since this may damage the rectifier.

The **electronic voltage regulator** controls the AC generator voltage.

The voltage regulator being factory-adjusted requires no further maintenance.

Do not disturb the factory adjustment. When installing the regulator on the motorcycle see that it is grounded safely.

Electric horn. The motorcycle is equipped with type horn which sounds when ignition is on and the horn button depressed. The horn can be adjusted with an adjusting screw located at the rear

portion of the horn body.

Headlight. A 7" diameter DOT approved sealed beam headlight is used on the US URAL. Adjust it so that the high-beam is horizontal when the motorcycle is in its normal loaded condition.

Figure 32. Electric Circuit Diagram

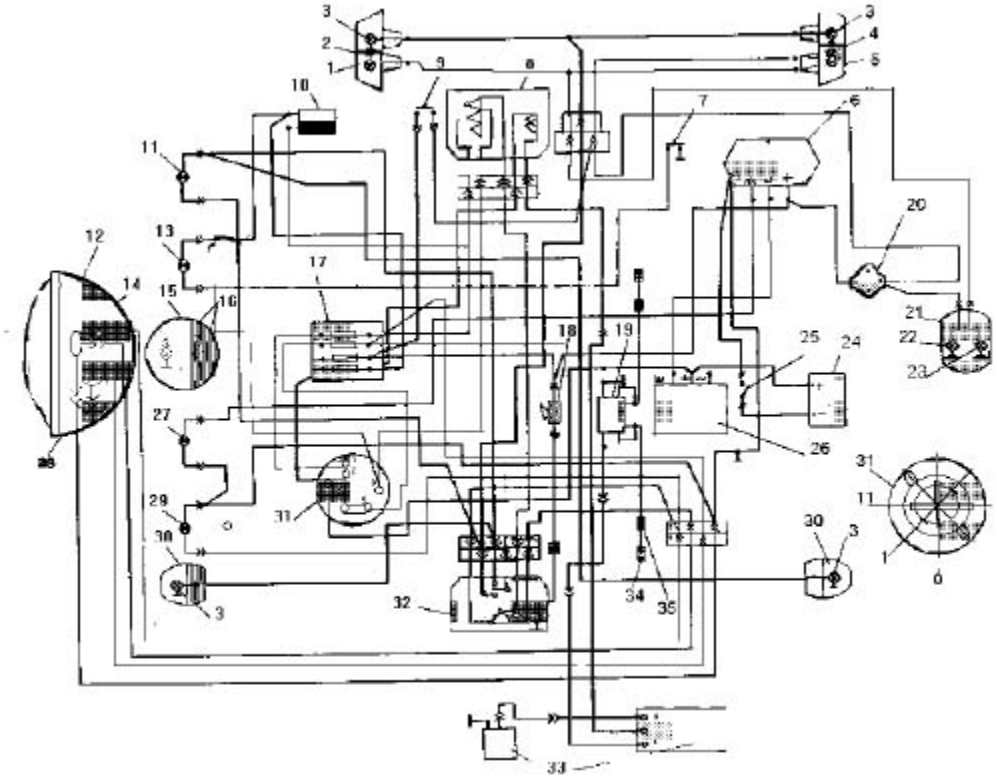

1 - Sidecar side bulb	13 - Neutral gear ON indicator bulb	24 - Battery
2 - Sidecar front lamp	14 - High/low beam headlight bulb	25 - Master Battery Switch*
3 - Traffic indicator bulb	15 - Speedometer	26 - Generator
4 - Sidecar rear lamp	16 - Speedometer illumination bulbs	27 - Generator operation indicator bulb
5 - Sidecar side and brake bulb	17 - Fuse plate	28 - Side and parking bulb in lamp
6 - Adjustment relay	18 - Horn	29 - Highbeam ON indicator bulb of lamp
7 - Contact (neutral gear indicator switch)	19 - Induction coil	30 - Left turn indicator
8 - "Day/night" switch with emergency "ignition out" switch	20 - Foot brake signal switch	31 - Ignition lock
9 - Hand brake signal switch	21 - Motorcycle rear lamp	32 - Light and turn indicator switch, horn button
10 - Turn indicator interrupter	22 - Braking signal bulb	33 - Interrupter and commutator
11 - Turn indicator bulb	23 - Side bulb & number	34 - Spark plug
12 - Motorcycle head lamp plate illumination bulb		35 - Spark plug cap

*** Deleted on electric start**

The **stop light switch** of the hand brake is screwed into the base of the hand brake lever and is fixed with a locknut.

The **stop light switch** is secured on the frame bracket by means of two screws. The switch rod is connected via a spring to the top arm of the foot brake pedal. When installing the stop light switch, see that the spring coupling the switch rod and the brake pedal is not loose. If the stop light either stays on or doesn't come on, adjust the spring tension by moving the stop light switch backwards or forward on the frame & re-tightening the two screws.

The **master battery switch** serves for disconnection of all the motorcycle systems from the storage battery for a long-term

parking. The switch is located under the seat except on the electric start models where it has been removed.

Chapter 10 *(Electrical Equipment)*

Electrical Equipment Maintenance

During the daily preventive inspection, check the functioning and the condition of the electrical equipment. After every 4,500 - 5,000 km, inspect the spark plugs. The gap is readjusted by bending the end of the side electrode. Also check the condition of the spark plug wires.

Care of generator. In the course of daily inspection, check the fastening of wires to the generator terminals, fastening of the generator on the engine crankcase, backlash of the gears (by listening). In case of too little backlash of the drive gear, excessive wear and overheating of the generator bearings take place.

Every 10,000 km, check for proper tightening of:

nuts of the binding post bolts the generator clamping screws
the generator fastening nuts

Every 20,000 km clean the cover cavity at the slip rings end from brush and copper dust. Blow through the generator with compressed air.

At least once monthly, or daily on electric start bikes when taking short trips, check the charge of the storage battery. If it is low, recharge overnight with a small 12V charger (one amp preferred, 2 amp max.).

Note: on electric start models the electrical draw from the battery is significantly greater than kick start models. Therefore to avoid starting problems and a drained battery, the use of a one amp "trickle" charger is highly recommended. It should be used whenever the bike is idle, especially when taking short trips.

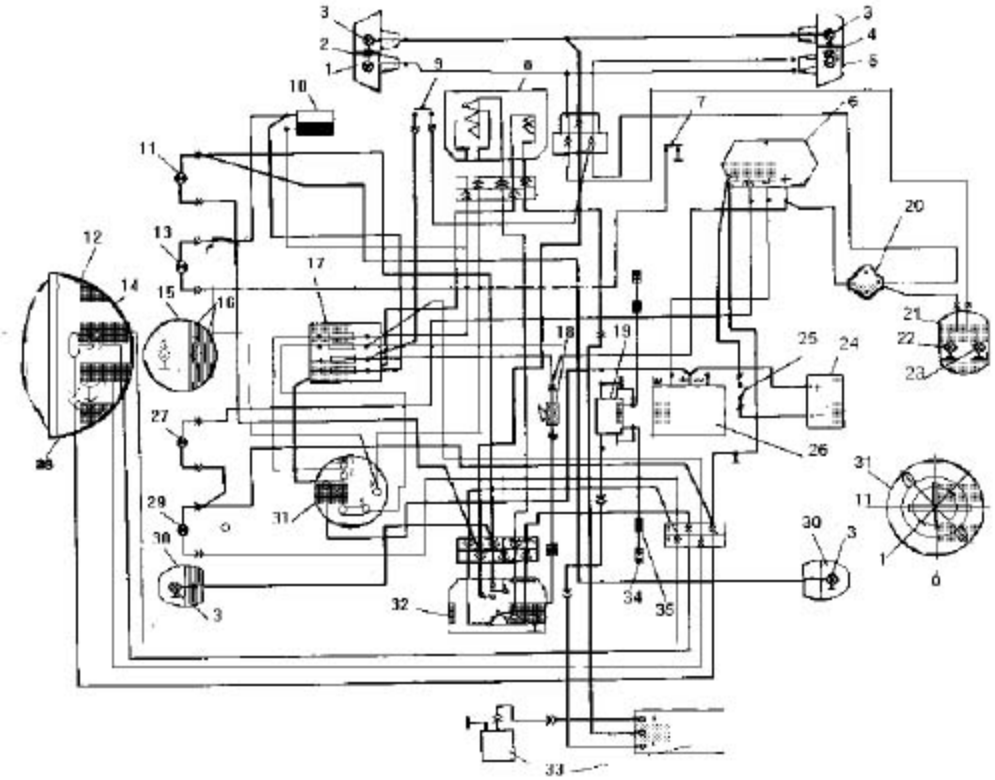

1 - Sidecar side bulb	13 - Neutral gear ON indicator bulb	24 - Battery
2 - Sidecar front lamp	14 - High/low beam headlight bulb	25 - Master Battery Switch*
3 - Traffic indicator bulb	15 - Speedometer	26 - Generator
4 - Sidecar rear lamp	16 - Speedometer illumination bulbs	27 - Generator operation indicator bulb
5 - Sidecar side and brake bulb	17 - Fuse plate	28 - Side and parking bulb in lamp
6 - Adjustment relay	18 - Horn	29 - Highbeam ON indicator bulb of lamp
7 - Contact (neutral gear indicator switch)	19 - Induction coil	30 - Left turn indicator

8 - "Day/night" switch with emergency "ignition out" switch	20 - Foot brake signal switch	31 - Ignition lock
9 - Hand brake signal switch	21 - Motorcycle rear lamp	32 - Light and turn indicator switch, horn button
10 - Turn indicator interrupter	22 - Braking signal bulb	33 - Interrupter and commutator
11 - Turn indicator bulb	23 - Side bulb & number	34 - Spark plug
12 - Motorcycle head lamp plate illumination bulb		35 - Spark plug cap

*** Deleted on electric start**

The **stop light switch** of the hand brake is screwed into the base of the hand brake lever and is fixed with a locknut.

The **stop light switch** is secured on the frame bracket by means of two screws. The switch rod is connected via a spring to the top arm of the foot brake pedal. When installing the stop light switch, see that the spring coupling the switch rod and the brake pedal is not loose. If the stop light either stays on or doesn't come on, adjust the spring tension by moving the stop light switch backwards or forward on the frame & re-tightening the two screws.

The **master battery switch** serves for disconnection of all the motorcycle systems from the storage battery for a long-term parking. The switch is located under the seat except on the electric start models where it has been removed.

Chapter 11

Maintenance of Motorcycle

Maintenance should be performed after the specified total kilometers run irrespective of the technical condition of the motorcycle.

Different service duties and technical condition of the motorcycle may necessitate a change in the intervals.

The Lubrication Chart indicating lubrication points of the motorcycle is given in Fig. 35. A summary of lubrication maintenance intervals is given in the lubrication chart**.**

Cosmetic Maintenance

The enjoyment and resale value of your vehicle is greatly enhanced by consideration to the "look" and cosmetic perfection of your vehicle. Due to the numerous metal surfaces on a sidecar rig, special care must be taken to prevent rust from occurring and/or to removed any rust or oxidation.

Blue-Job â is a product recommended to remove the oxides from exhaust pipes and other chrome hardware. This is available from your URAL dealer.

Chapter 11 *(Maintenance of Motorcycle)*

Maintenance Schedule Summary

The following schedule is broken into two columns to indicate the type of usage and operating environment to which the machine will be subject. The "**Normal Duty**" category includes operation in dusty, hot climates, while pulling loads on hilly terrain for significant periods of time in the maintenance cycle, operation primarily with the sidecar accessory attached or for owners who want to take extra care to keep their machines in "tip top" condition. This is the schedule presented in the rest of this booklet.

The "**Light Duty"** schedule is the minimal maintenance that an owner should perform to keep the factory warranty in place. It is acceptable when the machine is used primarily in ideal climates with very little dust or contamination of fuel supply and with sidecar accessory unattached.

1. Change motor and trans. oil, replace filter element, clean and/or replace air filter element and fuel filter.

Normal: 500 1,500 2,500 3,500 5,000 then every 2,500
Light: 4,500 10,000 15,000 20,000 25,000 30,000

2. Inspect and clean spark plugs, tighten exhaust joints.

Normal: Every 4,500 - 5,000
Light: Every 4,500 - 5,000

3. Adjust throttle cable, clutch and brake cables, check gear shift linkage for adjustment.

Normal: 500 then every 2,500
Light: Every 4,500 - 5,000

4. Adjust valves and check battery fluid.

Normal: 500, then every 2,500
Light: Every 4,500 - 5,000

5. Lubricate drive axle/hub, replace final drive gear oil.

Normal: Every 2,500 - 3,000, replace at 10,000 km

Light: Every 4,500 - 5,000, replace at 10,000 km

Figure 35. Lubrication diagram

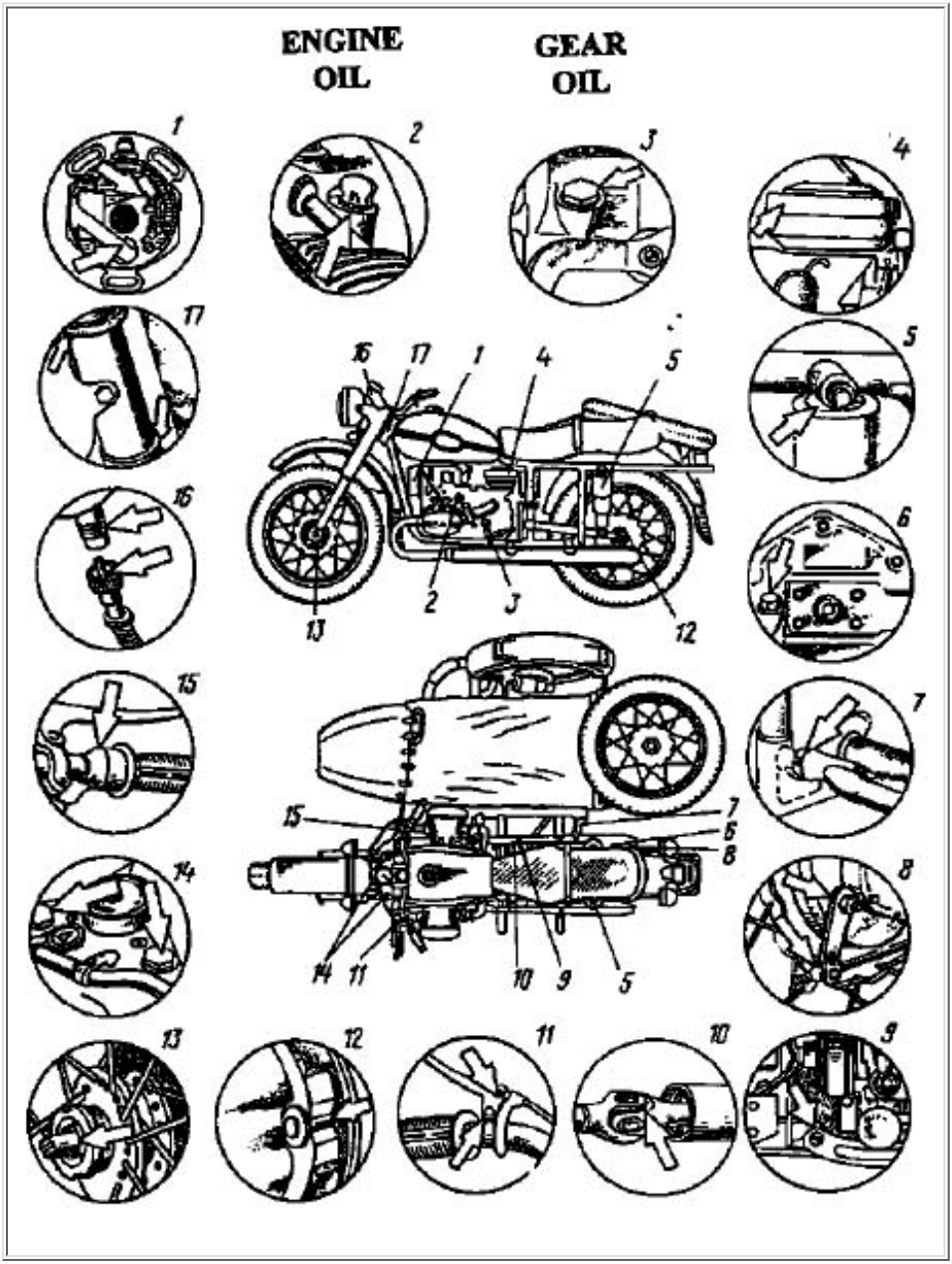

Chapter 11 *(Maintenance of Motorcycle)*

Lubrication Chart

(see next page for oil details)

Item	Part To Be Lubricated	Lubricant	After Break-In
1	Lever pin and interrupter felt Pins and weight holes, automatic unit cam bushing	Industrial oil or spindle oil	Every 5,000 km Every 5,000 km
2	Engine crankcase Oil filter	see [3]	Every 2,500 km[1] Every 5,000 km
3	Gearbox	see [3]	Every 2,500 km[2]
4	Air cleaner Spray	WD-40	Wash and oil every 2,500 km
5	Shock absorbers of rear suspension and sidecar wheel suspension	Industrial oil or spindle oil	Change every 10,000 km
6	Final drive	80/90 Gear and URAL® O.T.[4] Lube	Top up every 2,500 km Change every 10,000 km
7	Hinges of sidecar collet joint	Grease	Every 10,000 km
8	Hinge joints of brake system	Spindle oil/WD-40	Every 5,000 km
9	Brake pedal shaft	Spindle oil/WD-40	Every 2,500 km
10	Universal joint of propeller shaft (grease cup)	Grease	Every 10,000 km
11	Lever pins and end pieces of clutch and hand brake cables Clutch, front brake and throttles control cables	Grease Spindle oil /WD-40	Every 5,000 km Every 5,000 km

12	Pins and cams of brake shoes	Grease	Every 5,000 km
13	Wheel hub	Grease	Every 10,000 km
14	Front fork dampers (lubrication points)	Spindle oil/WD-40	Change every 10,000 km
15	Carburetor throttle control twist grip	Grease	Every 5,000 km
16	Speedometer drive flexible shaft and speedometer axle	Industrial oil or spindle oil	Every 10,000 km
17	Steering column bearings	Grease	Every 20,000 km
18	Telescopic forks (-10 and solo)	5wt-10wt Fork oil	As needed

Footnotes:

1. During break-in, changes required at 500km, 1,500km, 2,500km, 3,500km and 5,000km.
2. During break-in, change at 500 km and then 2,500km.
3. 20W/50 Det. oil and URAL® Oil Treatment
4. URAL® O.T. = URAL® Oil Treatment

Chapter 11 *(Maintenance of Motorcycle)*

Required Lubrication

The URAL has been certified for EPA with **premium grade SAE 20W/50 petroleum detergent oil**. This oil has been used in both the engine and transmission.

To further protect the URAL's air cooled engine, which operates under high temperature compared to liquid cooled engines, a special oil treatment product has been developed and produced for URAL motorcycles by Hilton Oil Co. This product, URAL Oil Treatment, has proven in tests to lower the engine's operating temperatures and reduce the friction and wear in the engine, gearbox and final drive.

URAL Oil Treatment should be continually replaced whenever changing the oil in your URAL. The following chart shows the amounts and brands of oil and oil treatment used originally in your motorcycle.

Chapter 11 *(Maintenance of Motorcycle)*

List of Recommended Lubricants

Lubrication Area	Detergent Oil Amount	URAL Oil Treatment	Total Volume Amount Lubrication Fluids
Engine Crankcase:	20w/50 Castrol 55.6 oz.	12 oz.	2.0 L (67.6 oz.)
Gearbox:	20w/50 Castrol 19.5 oz.	12 oz.	0.9 L (31.5 oz.)
Final Drive: **Single Wheel**	80/90 wt. Gearlube 60ml	50 ml	110 ml /3.3 oz.
Dual Wheel	90 ml	60 ml	150 ml / 5 oz.

During maintenance of the motorcycle, proceed as follows:

check oil level, topping off or changing oil altogether, if required draw threaded joints lubricate the lubrication points check functioning of the instruments included in the electrical equipment and the ignition system, attending to the jobs outlined in the manual; check pressure in the tires bringing it to the specified values.

Note: Since the URAL engine is an old fashioned design, some leakage, seepage or dripping of oil and/or other lubricants is normal. It is not indicative of any malfunctioning and therefore is not covered as a warranty item unless motorcycle operation or safety are materially affected.

Chapter 11 *(Maintenance of Motorcycle)*

Care of Motorcycle Paint

When washing the motorcycle, use a weak stream of cold or slightly heated water. Do not remove dust and mud by rubbing the surface with a dry cloth as sand particles will degrade the surface and the paint will rapidly lose its brilliance. While washing, do not use soda solution, kerosene, citric acids or mineral oils. If the surface is stained with mineral oil, degrease by wiping with a rag. If after removal of mud and dust with a jet of water, some dirt is left on the surface, remove it with the help of a sponge, a soft hair brush or a flannel and water, but not allowing separate water drops to dry out on the surface. Finally, polish the painted surfaces with a dry soft flannel.

To repair painted areas, each motorcycle is furnished with a bottle of matching touch up paint.

For patching proceed as follows: clean the surface with turpentine rub the damaged spot with a waterproof abrasive cloth and water rub thoroughly thin the enamel with turpentine or acetone paint using a soft brush or a spray gun.

After patching let the surface dry in air for 15 min, then proceed with drying at 212°F-248°F/100°C-120°C with the aid of heat reflector or an electric lamp until the coat is perfectly dry.

Bear in mind that enamels are inflammable.

Nitroenamels may be used for patching jobs. They dry out readily when exposed to air of ambient temperature and may also be dissolved with acetone.

The painted surfaces of the motorcycle feature natural gloss. In case some dull spots appear, remedy them by polishing as follows. Take a solution of wax polishing compound and having washed the dull spots thoroughly, smear a thin film of the compound with a soft wad (cotton, cotton gauze of flannel) over the surface. Rub the polishing compound making circular motions with the wad. In 3 - 5 min. of drying, wipe the surface with a clean dry piece of cloth or flannel until luster appears.

Chapter 11 *(Maintenance of Motorcycle)*

Preservation and Storage

If the motorcycle is put in storage for the season, arrange it on supports (timbers) and proceed with the preservation treatment. Check that the wheel tire pressure is within specifications. Store the motorcycle away from acids, alkalis, mineral fertilizers and other harmful substances.

Prior to placing it in storage, clean the bike thoroughly, start the engine and let it run with the gasoline cock closed to remove gasoline in the float chambers of carburetors. Then squirt some storage oil into each cylinder through the spark plug holes. Turn the crankshaft by depressing the kick lever pedal to distribute lubricant over the interior of the cylinders. Lubricate the surfaces of chrome and zinc plated parts with a rust inhibitor. Smear all the points provided with grease cups with commercial grease. Seal the outlet holes of the mufflers.

Before starting a trip on the motorcycle that was under preservation, proceed with the jobs listed in the section "Pre-Trip Preliminaries".

Winter Considerations

Motorists in many areas of the US experience the use of salt and other chemicals that are applied to road surfaces in the winter.

Salt or other caustic chemicals should always be removed from your bike's surfaces with fresh water as soon as possible.

Undercoating of fenders is recommended for those areas with salt and/or fine gravel or sand. See your dealer for details.

Chapter 11 *(Maintenance of Motorcycle)*

Figure 36. Layout of Bearings and Seals

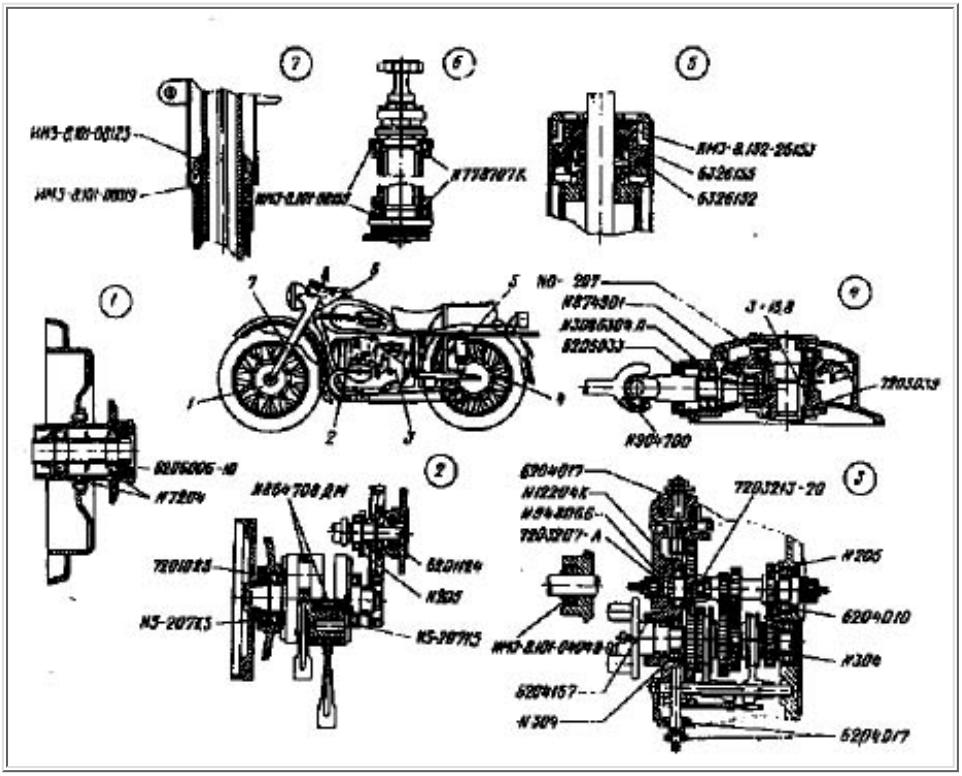

Seals Mounted on Motorcycle (Fig. 36)

Part No.	Description	Location
6204010	Clutch shaft seal assembly	Gearbox, Front Side
6204017	Gear case RH cover seal assy	Gearbox cover, RH Side
6204147	1.90 RH gearcase cover seal	Gearbox cover, LH Side
6204157	Main shaft	Gearbox crankcase cover

6205033	U-joint fork seal, assy	Final drive case
6206006-10	Rubber packing assy	Wheel nut assy.
6308121	Seal collar	Fork leg
7203207-A	Clutch release slider ring	Clutch release slide
7203213-20	Seals of clutch release rod	Clutch release rod
7205039	Collar type seal & spring assy	Final drive case
7205113-b	Collar seal drive gearcase	Final drive case
Z101-04122	Packing gland starting shaft	Gearbox cover
Z101-04131	Ring	Gearbox, front side
Z101-08019	Collar with spring assy	Fork leg
Z101-08123	Seal collar	Fork leg
Z101-08159	Seal	Steering column

Chapter 11 *(Maintenance of Motorcycle)*

Battery

Storage batteries on the motorcycle should function at ambient air temperature from -40°C to plus 60°C/ 40°F to 140°F.

As the battery is in service:

regularly check the voltage generator-regulator for 13.5 - 14.5 V across the charging voltage do not allow the battery to remain discharged for more than 24 hours. Avoid prolonged discharging as this may bring about sulphatation of plates use only distilled water to maintain the normal level of electrolyte. In service, do not top off the level or the density of electrolyte by adding acid, unless it is well known that the drop of electrolyte level is caused by spilling electrolyte out of cells coat bolts, nuts, washers and tips with petroleum jelly or battery grease. Use two wrenches for clamping or undoing the nuts to avoid breaking battery parts. use a small "floating" charger which will keep the battery from losing its power while you are not using your bike. This type of charger won't overcharge your battery, but will keep it active, so sulfating won't occur. You will be able to find many chargers of this kind on the market.

Do not interconnect the terminals (wires of dissimilar polarities) to check for sparking.

Storage of batteries during lay-up. The batteries mounted on a motorcycle during winter lay-up and during suspensions in service should be held charged and primed with electrolyte.

Before lay-up, fully charge the batteries, replace the plugs, wash the battery surface with water and wipe dry, clean the bolts and nuts of dirt and lubricate with commercial grease.

WARNING: Batteries contain sulfuric acid which can cause severe burns. Avoid contact with skin, eyes or clothing. ANTIDOTE: External — flush with water. INTERNAL — drink large quantities of water followed by milk of magnesia, vegetable oil, or beaten eggs. Call doctor immediately.

Caution: When charging the battery, disconnect the positive terminal (+) from the battery to prevent damage to the electrical components - Never jump-start the motorcycle!

Warning: To avoid discharging the battery on repeated short trips,keep the engine speed high enough to turn the dashboard battery indicator light OFF. When not riding, hook the battery to a trickle charger to keep the battery fully charged, especially on electric starter models as the battery drain from starting is significant.

WARNING: Batteries produce explosive hydrogen gas at all times — especially when being charged. Keep cigarettes, open flame, and sparks away from battery at all times. Ventilate area when charging battery. Always protect hands and protect eyes with shield or goggles when working near a battery or acid. KEEP BATTERIES AND ACID OUT OF THE REACH OF CHILDREN!

CAUTION: If battery is filled to a higher level than specified, some of the solution will be forced out through the vent tube when battery is charging. This will not only weaken the solution, but also may damage parts near the battery. Keep battery clean and lightly coat terminals with petroleum jelly to prevent corrosion. Do not over tighten terminal connections. To prevent battery case damage caused by pressure build-up, be sure vent tube is properly routed and not kinked or obstructed.

Chapter 11 *(Maintenance of Motorcycle)*

List of Individual Tool Set, Spare Parts, Accessories & Documents

DESCRIPTION	QTY	DESCRIPTION	QTY
Tools		**Accessories**	
1. Wrench 7 x 8	1	1. Air Pump	1
2. Wrench 10 x 12	1	2. Air Pressure Gauge	1
3. Wrench 13 x 14	1	3. Ignition keys	2
4. Wrench 14 x 17	1	4. Theft proof lock keys	2
5. Wrench 19 x 22	1		
6. Socket wrench 10 x 12	1	**Set of Spares**	
7. Socket wrench 10 x 13	1	1. Inner tube patch kit	1
8. Socket wrench 19 x 21	1	2. Oil filter element	1
9. Wrench 27 mm	1	3. Fuses	2
10. Double head wrench	1	4. Touch up paint	1
11. Spanner wrench	1		
12. Spanner wrench assembly	1	**Documents**	
13. Screwdriver 150 mm	1	1. Owner's Manual	1

14. Screwdriver 100 mm	1	2. Driving the URAL Sidecar Motorcycle (except with Solo models)	1
15. Pliers	1		
16. Tool kit pouch	1	3. Owner's Video	1

Chapter 12

Sportsman Motorcycle with Driven Sidecar Wheel

Description

The sidecar wheel is driven by a propeller shaft connected with the motorcycle main drive with a differential gear (Fig. 37 & Fig. 38).

The following units that have been redesigned to produce the driven sidecar wheel are:

A. Main drive.
B. Rear wheel swing arm
C. Sidecar chassis, fender and brake tie rod.

Additionally, there are a number of new parts, including the cross shaft to the sidecar wheel and two universal joints.

Chapter 12 *(Sportsman Motorcycle with Driven Sidecar Wheel)*

Handling Differences from the Single Wheel Drive

Since the sidecar wheel is driven, the Sportsman motorcycle handles differently from the standard Tourist (single wheel drive) motorcycle. Turning left, especially when accelerating from a stop is much easier since the driven sidecar wheel helps to pull the sidecar forward to the left. Turning to the right from a stop is somewhat more difficult than the single wheel drive where the drag of the sidecar tends to pull the motorcycle to the right when accelerating. The driven sidecar wheel makes the Sportsman less likely to pull right when accelerating and left when decelerating.

The sidecar wheel receives its torque via a differential in the final drive. About 30% of the power is transferred to the sidecar wheel during steady state operations with the sidecar wheel on the ground. However, if the sidecar wheel is lifted off of the ground when power is being applied, most of the power will go to it. If the sidecar wheel is kept in the air, it will spin up and the motorcycle will gradually roll to a stop. Thus, it is not recommended that the Sportsman sidecar wheel ever be lifted for more than a few seconds during normal operation. Lifting of the sidecar wheel should be limited to low speed training in a parking lot with extreme care taken to reduce engine speed as soon as the sidecar wheel is lifted. Passengers or cargo should always be first loaded in the sidecar before any load beyond the driver is put on the motorcycle.

Chapter 12 *(Sportsman Motorcycle with Driven Sidecar Wheel)*

Sidecar Maintenance

Check before driving that the final drive swing arm, propeller shaft fork and sun gear flange are bolted tightly.

After the first 2,500 kilometers, change the oil in the main drive gearcase and then check the oil level every 2,500 kilometers. Oil level must not be lower than the oil gauge tip.

Grease the moveable slot joint of the propeller shaft sufficiently every 5,000 kilometers. Do not over grease the slotted hub of the propeller shaft as it may prevent the slotted shaft from moving freely in the hub.

The bearing unit of the sidecar wheel where an oilless bearing is installed in, requires no maintenance.

After every 10,000 kilometers:

Change the grease in the universal joint bearing. Change the oil in the main drive gear case as follows:

a. Put the motorcycle on the stand.
b. Remove the drain plug and filler plug and drain the oil.
c. Fill with 80-90 gear lube.

Chapter 12 *(Sportsman Motorcycle with Driven Sidecar)*

The Main Drive and Differential

To knock down the main drive:

> Remove the two bolts attaching the propeller shaft fork to the sun gear flange and
> move the fork in the direction of the side-car giving access to the rear wheel axle nut. Remove the wheel. Remove the brake shoes. Drain out the oil from the main drive gear case. Remove the collar and the cover. Remove the gear case cover nuts and remove the cover together with the gasket.

Differential body and gears:

> Remove the nut from the cover together with the sun gear and seal. Tap lightly to remove the differential body with seal from the cover. Remove the epicycle gear with two sets of rollers and seal and spacer from the case. Remove the driven conical gear with the hub. Remove the needle rollers from the splines in the hub in the gear case.

Proceed further as described in the standard repair manual. Assembling the main drive is effected in reversed order.

Before tightening the nut in the case cover, the sun gear flange with seal and ball bearing should be installed. The bronze ring should be positioned onto the sun gear neck next after the steel ring. After putting the main drive together, check and adjust the side play of the conical gears by tightening or loosening the nut in the case cover. When side play of 0.004"-0.012"/.01 to 0.3 mm is achieved, stop adjusting and fix the nut with the retainer.

To knock down the bearing unit of the sidecar wheel:

> Remove the fork of the propeller shaft from the flange of the sun gear of the main drive. Remove the sidecar wheel.

Note: The Sportsman has a nut securing the axle of the rear wheel in place. Do not try to get the Sportsman's axle out, you may bend the bike's frame.

> Remove the brake shoes. Remove the wheel axle in the direction of the sidecar. Remove the brake drum cover.

Figure 37. Main Drive

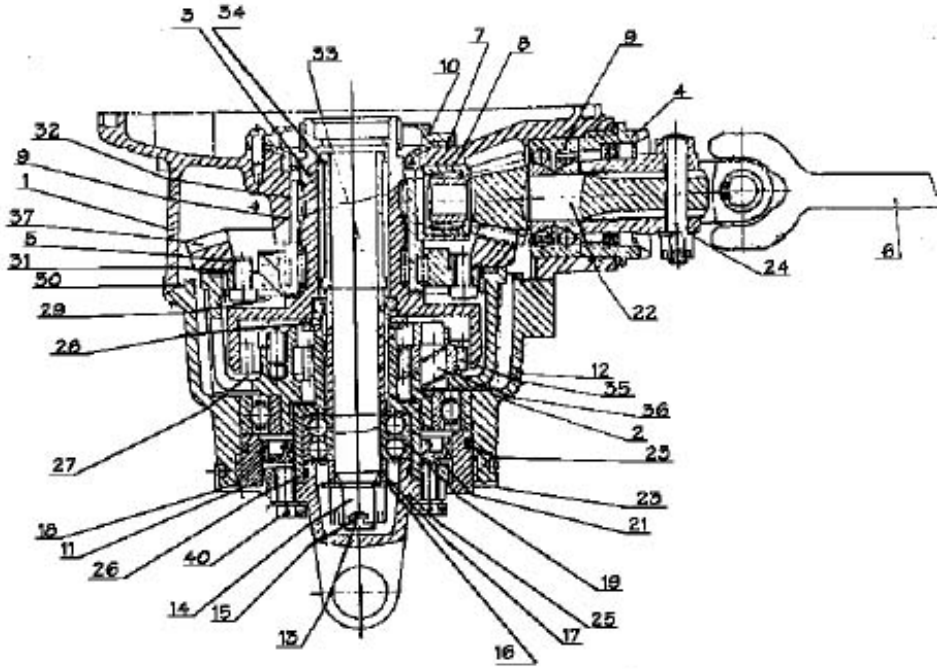

1 - Gear case	11 - Sun gear	21 - Retainer	31 - Roller
2 - Differential body	12 - Main drive case cover	22 - Driving gear	32 - Needle roller
3 - Epicycle gear	13 - Rear wheel axle	23 - Seal	33 - Spacer
4 - Bearing nut	14 - Axle nut	24 - Bolt	34 - Spacer
5 - Hub	15 - Splint	25 - Propeller shaft fork	35 - Satellite gear
6 - Propellor shaft	16 - Ring	26 - Seal rings	36 - Satellite pin
7 - Case seal 1	7 - Spacer	27 - Driving gear	37 - Driven gear crown
8 - Needle bearing	18 - Nut	28 - Bronze spacer	38 - Screw
9 - Double-row bearing	19 - Double-row bearing	29 - Spacer	39 - Ring
10 - Seal cap	20 - Sun gear seal	30 - Gasket	40 - Bolt

Figure 38. Sidecar Bearing Unit

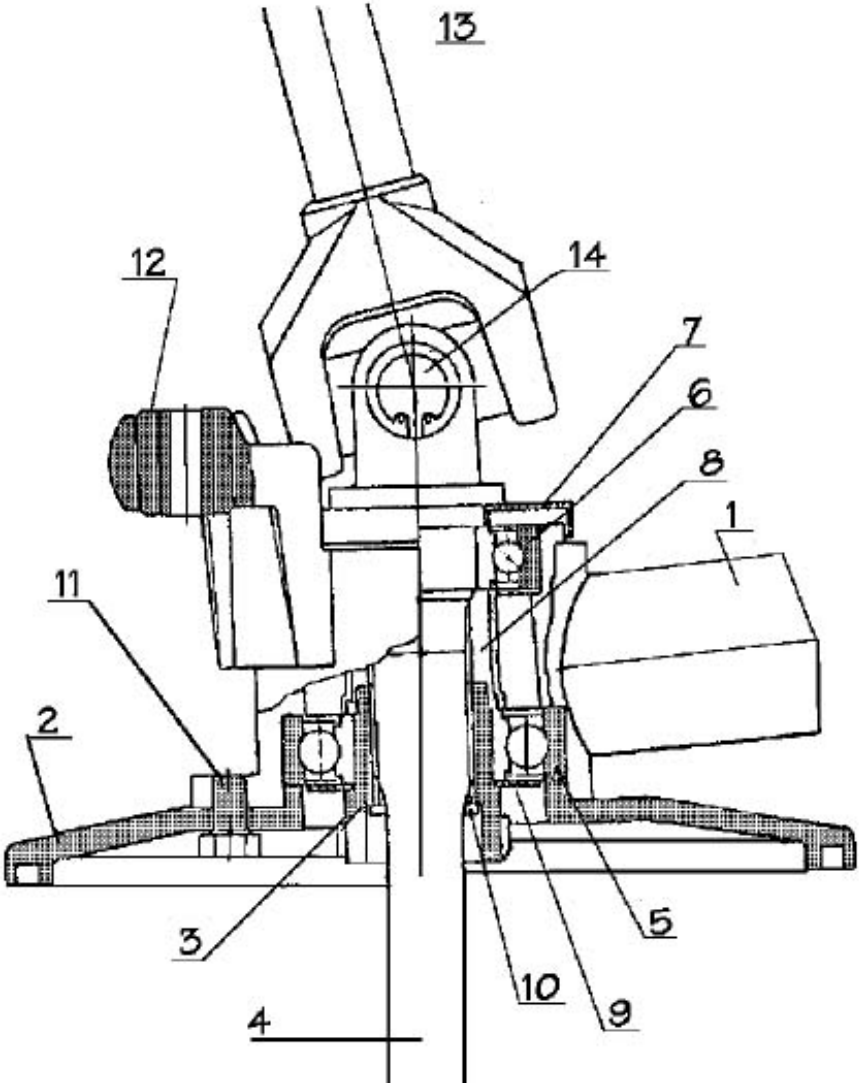

1 - Swinging arm	6 - Ball bearing	11 - Bolt
2 - Braking drum cover	7 - Protective ring	12 - Shock absorber silent block
3 - Slotted hub	8 - Spacer	13 - Propeller shaft
4 - Sidecar pin	9 - Ring	14 - Universal joint
5 - Ball bearing	10 - Spacer ring	

Chapter 13

Learning to Ride the Ural Motorcycle with Sidecar Accessory

The URAL sidecar motorcycle, since it has three wheels, behaves quite differently from either a solo motorcycle or a car. For these reasons the following label has been attached to your motorcycle tank:

WARNING: Left-hand and right-hand turns may be dangerous. Excessive speed and an unweighted sidecar must be avoided. Read and practice the techniques in the provided "Driving the URAL Sidecar."

The bottom line is that, like any other motor vehicle, if the URAL is driven beyond its design limits, you can get hurt. Properly driven, since you have the added stability of the third wheel in case of sand, ice or slippery road conditions, the URAL will give you a much safer ride under these adverse conditions than a solo motorcycle.

Finally, you will enjoy the fact that the URAL will not expose you to tipping over at stop signs, which has happened all too frequently to beginners as well as experienced solo motorcycle drivers.

Even though special skills are required, these skills are not difficult to master. They are clearly defined in the Driving the URAL Sidecar Motorcycle manual.

This manual is included with each new URAL sidecar motorcycle outfit. Before driving your new URAL , carefully study this manual from cover-to-cover, fill in the exam questions, review the manual to check your answers and practice all the maneuvers outlined in the manual before going out into traffic.

If possible, an experienced sidecar driver (preferably from your Authorized URAL dealer) should ride along during your first ride. If not, put about 100 LB of ballast in the sidecar during your initial training. Although an experienced driver can safely drive the URAL with an empty chair (sidecar) a beginner should always have ballast or a passenger in the chair.

Check with your local URAL Dealer to find out your particular state's sidecar driver's license requirements. As described in the Driving the URAL Sidecar Motorcycle, the sidecar weight, drag and geometry will result in the following characteristics for your

URAL :

When you accelerate, the URAL will pull slightly to the right due to the inertia and drag of the sidecar.

When you let off the gas it will pull slightly to the left due to the inertia of the sidecar.

Note: The Sportsman (driven sidecar wheel) model handles differently than the single wheel drive models (see chapter 12).

If the outfit is set-up correctly (proper toe-in of sidecar, lean-out of motorcycle and correct brake adjustment) it should not pull to either side during constant speed operation or when the front and rear brakes are simultaneously applied.

The best way to make friends with your URAL is to take it to a large, paved, non-congested parking lot. Practice starting and stopping from various speeds, shifting up and down, accelerating and decelerating in each gear, turning right and left at slow-to-medium speeds. Move on to practice the general maneuvers outlined in the Driving the URAL Sidecar Motorcycle.

Finally, practice lifting the chair. To do this drive in a clockwise circle about 20 feet in diameter. Gradually increase your speed until the sidecar wheel lifts from the surface 6 - 12 inches. Then roll off the throttle and ease steering pressure on the grips so it gradually comes back down. Repeat doing this until you feel comfortable with the wheel in the air. Remember, the moment you roll off the throttle it will come down. When you have mastered "flying the chair" to the point where you can keep it in the air for a full circle you will have a good feel for the speed and turn radius that will lift the chair. Then carefully experiment with larger and smaller circles.

If, after gaining proficiency with the URAL , you plan to drive on the street with an empty chair, go back to the parking lot and practice the above maneuvers as well as all other maneuvers outlined in the Driving the URAL Sidecar Motorcycle with an empty chair. You'll find that the chair will lift much more readily when it is empty, especially if you enter a decreasing radius turn (such as a freeway off ramp) at too high a speed. This is why we recommend generally carrying about 100 lbs. or more in the sidecar.

We strongly recommend that you join the United Sidecar Association. The current address and phone number is: USCA Membership, 130 South Michigan, Villa Park, Illinois, 60181, phone: (708) 833-6732.

Chapter 13 *(Learning to Ride the ural Motorcycle with Sidecar Accessory)*

Safe Operating Rules

Before operating your new URAL it is your responsibility to read and follow operating and maintenance instructions in this manual and follow these basic rules for your personal safety. Know and respect the Rules of the Road in your state. Use only URAL approved parts and accessories. Gasoline is extremely flammable and is explosive under certain conditions. Refuel in a well ventilated area with the engine stopped. Do not smoke or allow open flames or sparks when refueling or servicing the fuel system. Always close the fuel supply valve when the engine is not running to prevent flooding of the carburetors. Do not overfill fuel tank. Fill tank slowly to prevent fuel spillage. Leave air space to allow for fuel expansion. Do not fill more than about an inch below the lower edge of the tank filler. Motorcycle exhaust contains poisonous carbon monoxide gas. Do not inhale exhaust gases and never run the engine in a closed garage or confined area. Before starting engine, check for proper operation of brake, clutch, shifter, throttle controls, correct fuel and oil supply. A new motorcycle must be operated according to a special break-in procedure (see Running-In The New Motorcycle). Operate the motorcycle only at moderate speed and out of traffic until you have become thoroughly familiar with its operation and handling characteristics under all conditions. If you are an inexperienced rider we recommend that you obtain information and training in correct motorcycle riding technique. For the sidecar motorcycle, carefully study the Driving the URAL Sidecar Motorcycle. Do not exceed the legal speed limit or drive too fast for existing conditions. Always reduce speed when poor driving conditions exist. High speed increases the influence of any other condition affecting stability and the possibility of loss of control. Pay strict attention to road surfaces and wind conditions. Any two or three- wheeled vehicle may be subject to upsetting forces. Wind blasts from passing trucks, holes in the pavement, rough road surfaces, rider control error, etc., may influence the handling characteristics of your motorcycle. Should this happen, reduce speed and guide the motorcycle with a relaxed grip to a straight-away position. Do not brake abruptly or force the handlebars as this may aggravate an unstable condition. New riders should gain experience under various conditions while driving at moderate speeds. Operate your motorcycle defensively. Remember, a motorcycle does not afford the same protection as an automobile in an accident. Wear an

approved helmet, clothing and footgear suited to motorcycle riding. Bright or light colors are best for greater visibility in traffic especially at night. Avoid loose flowing garments and scarves. The exhaust pipes and mufflers get very hot when the engine is running and remain too hot to touch for some time after the engine is shut off. Wear clothing that will completely cover the legs when riding and avoid contact with the exhaust system. Do not allow others, under any circumstances to operate your motorcycle unless you are certain that they are experienced, licensed riders and are familiar with the operation of your particular motorcycle. When leaving the motorcycle unattended, remove ignition key from switch. Protect your motorcycle against theft. Safe motorcycle operation requires mental awareness and good judgment combined with a defensive driving attitude. Don't allow fatigue, alcohol or drugs to endanger your safety or the safety of others. Maintain your motorcycle in proper operating condition in accordance with the Maintenance Summary Schedules in this Owner's Manual. Particularly important to motorcycle stability is the tire inflation pressure, tread condition, and proper adjustment of wheel bearings and steering head bearings. Do not operate motorcycle with loose, worn or damaged steering system or front or rear suspension system as handling will be adversely affected. Contact your dealer for repair of steering or suspension system wear or damage. Do not tow a trailer. At street intersections, give the right-of-way to the vehicle on your right. Do not presume too much when you have the right-of-way, the other driver may not know you have it. Always signal when preparing to stop or turn. All traffic signs, including those used for the control of traffic at intersections, should be obeyed promptly and to the letter. SLOW DOWN signs near schools and CAUTION signs at railroad crossings should always be observed and your actions governed accordingly. Never anticipate a traffic light. When a change is indicated from GO to STOP (or vice versa) in the traffic control systems at intersections, await the change. When intending to turn to the left, give signal at least 100 feet before reaching the turning point. Move over to the centerline of the street (unless local rules require otherwise), slow down passing the intersection of the street and then turn carefully to the left. In turning either right or left, watch for pedestrians as well as vehicles. Do not leave the curb or parking area without signaling and seeing that your way is clear to drive into moving traffic. A moving line of traffic has the right-of-way. See that your license tags are installed in the position specified by law and that they are clearly visible under all conditions. Keep them clean. Ride at a safe speed — a speed consistent with the type of highway you are on, and always note whether the road is dry, oily, icy or wet. Each varying condition on the highway means adjusting your speed accordingly.

Chapter 13 *(Learning to Ride the Ural Motorcycle with Sidecar Accessory)*

Tire Data

WARNING: For your own personal safety, tires and tubes must be correctly matched to wheel rims. See your Authorized URAL Dealer for further information. Mismatching tires, tubes and rims may result in damage to the tire bead during mounting or may allow the tire to slip on the rim, possible causing tire failure. In addition, using tires other than those specified may adversely affect motorcycle stability. Protective rubber rim strips must be used. Tire sizes are molded on the tire sidewall. Tube sizes are printed on the tube.

URAL tires that have been tested by the manufacturer to ensure compliance with DOT requirements are available from your Authorized URAL Dealer.

The following tire data labels are mounted on the front frame of your URAL.

For motorcycle with sidecar accessory 19" tire
IMZ 8.103-40, GVWR:137 LB.(623 KG.), GAWRs:

Front: 491 lb. (223 kg) with 4.00 x 19 tire, 19 x 3.00 rim, at 22 psi cold
Side: 304 lb. (138 kg) with 4.00 x 19 tire, 19 x 3.00 rim, at 22 psi cold
Rear: 577 lb. (262 kg) with 4.00 x 19 tire, 19 x 3.00 rim, at 36 psi cold

For motorcycle with sidecar accessory 18" tire
IMZ 8.103.10, GVWR:1371 LB (623 KG.),GAWRs:

Front: 491 lb. (223 kg) with 3.50 x 18 tire, 18 x 3.00 rim, at 25 psi cold
Side: 304 lb. (138 kg) with 3.50 x 18 tire, 18 x 3.00 rim, at 25 psi cold
Rear: 577 lb. (262 kg) with 3.50 x 18 tire, 18 x 3.00 rim, at 36 psi cold

For solo motorcycle:
IMZ 8.123, GVWR:864 LB. (393 KG.), GAWRs:

Front: 348 lb. (158 kg) with 3.50 x 18 tire, 18 x 3.00 rim, at 25 psi

cold
Rear: 516 lb. (234 kg) with 3.50 x 18 tire, 18 x 3.00 rim, at 32 psi cold

WARNING: Maximum inflation pressure must not exceed specification on tire sidewall.

WARNING: When tires are worn to a tire center tread depths of 3/32 in, they should be replaced.

URAL STARTING & RUNNING TIPS

Starting The Engine

1. Open carburetor enricheners (marked "choke" on lever) on both carburetors (push lever down).

2. Make sure fuel cock is open **"O"** or on reserve **"P."** Fuel cock handle in 6 or 12 o'clock position.

3. Ignition **"RUN," "KILL,"** switch set to **"RUN"** (down), gearbox in **"NEUTRAL,"** master battery switch (under seat) **"ON."**

4. **Close** the air control shutter by moving the lever (located under the air filter) **up** and
forward.

5. With foot on kick starter lever and one hand on throttle handle, push foot down **swiftly and hard** while simultaneously opening the throttle slightly. Repeat until engine fires (usually 2 or 3 kicks).

6. After engine starts, **close** the enricheners by **pulling up** on lever(s) at carburetor(s), partially open the air control shutter (under the air filter) by moving the lever ¼" inch backwards. Let the engine warm up for 3 - 5 minutes, depending on the temperature.

7. After the engine has warmed up, completely **open** the air control shutter by moving the lever all the way **down** until it stops.

Trouble Shooting

If engine does not start with above method, the problem(s) may be one or more of the following:

1. Engine is "flooded," i.e., the spark plugs have been "fouled" by too much fuel and will not spark.

Correction: Flooding is corrected by removing the spark plugs and drying them.

2. Too little fuel is getting to the engine due to low fuel in tank and/or plugged fuel lines or fuel cock.

Correction: Clogged fuel lines or filter is corrected by blowing through fuel lines from carburetor end to remove any debris from lines. Fuel cock filter can be cleaned separately by removing and cleaning.

3. Little or no spark is available to the engine due to a low battery, (dim headlight), loose ignition wires.

Correction: Dead battery is corrected by charging battery, loose or broken ignition wires are corrected by replacing broken wire(s) or by re-connecting wire(s) at either the spark plug cap(s) or at the ignition coil under the distributor box cover at the front of the engine.

***4. Not enough compression in the cylinders due to excessive wear or broken valve(s).**

***5. No spark to engine due to failure of electronic commutator or pick-up assembly.**

***Items 4 & 5** above require the attention of a qualified mechanic at your URAL dealer.

*** WARNING !... Reverse Gear Damage...WARNING !***

Attempting to engage the reverse gear while the motorcycle is moving may cause SEVERE damage to the gearbox and will void the warranty. Engage the reverse gear only when the motorcycle is completely stopped and it is either in 1st gear or neutral.